01-JUNE-2000
NEW SHEET

IMPELLER CURVES

10EHL/10H61

FLOWSERVE

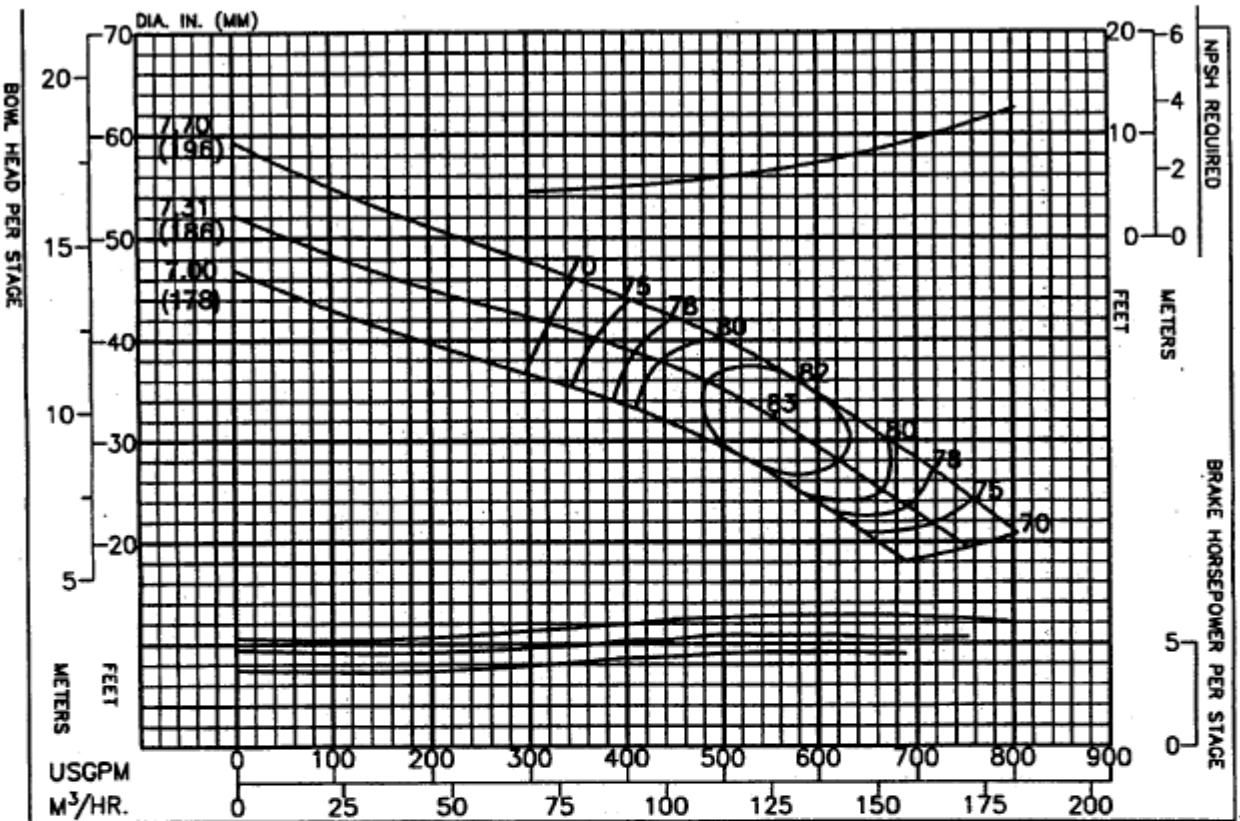

PERFORMANCE BASED ON PUMPING CLEAR WATER BELOW 85°F. WITH LISTED MAT'LS. COLUMN LOSSES NOT INCLUDED.	CHANGE STAGES	IN EFF. POINTS
	1	-3
	2	-2
BOWL – CAST IRON – LINED	3	-1
IMPELLER – BRONZE		

THRUST FACTORS AT BEP		
IMPELLER	LBS/FT	KG/M
STANDARD	5.34	7.96
EYE AREA– 14.3 SQ. IN.		

RPM	PUMP
1770	10EHL
ENCLOSED IMPELLER	CURVE NO.
N_s = 2920	EC–2386

Column	Nom. Size	Max. GPM	"A" Flanged	"B" Threaded
Optional				
Standard	6"	600	9.50"	9.50"
Optional	8"	1500	11.50"	9.63"
RATINGS				
Max. Pressure = 472 psi based on Class 30 Iron bowls				
Impeller and Shaft Weight = 16 pounds per stage				
Pump Shaft	Diameter = 1.50 inches			
	Max. HP. = 200 with 416 SS Pump Shaft			
Line Shaft Size	1.00	1.25	1.50	
Line Shaft H.P.	57	115	200	

Additional Data	
Max. Operating Speed.	3000
Max. No. of Stages	20
Max. Sphere Size	.13
End Play	.44
WR 2 Per Stage	.49
Bowl Ring Clearance	.004 - .006
Impeller Running Clearance (3)	0.125

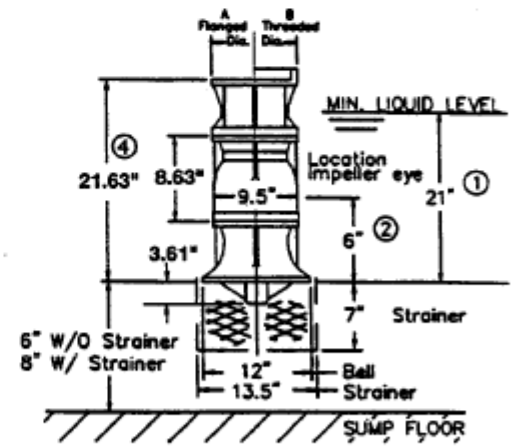

(1) Minimum submergence required to prevent vortex formation. The submergence needed to provide adequate NPSH to the first stage. Impeller may be greater or less than shown. The larger of the two values must be used to determine actual minimum allowable submergence.

(2) Location of eye of first stage impeller. Used to calculate NPSH. This is also the minimum priming submergence. (See note 1).

(3) Vertical Impeller to Bowl running clearance after shaft stretch.

(4) For Suction Case dimensions see sheets 20.25 and 20.27.

All Specifications Subject to Change Without Notice.