01-JUNE-2000
NEW SHEET

IMPELLER CURVES

12SKL/12KSL

FLOWSERVE

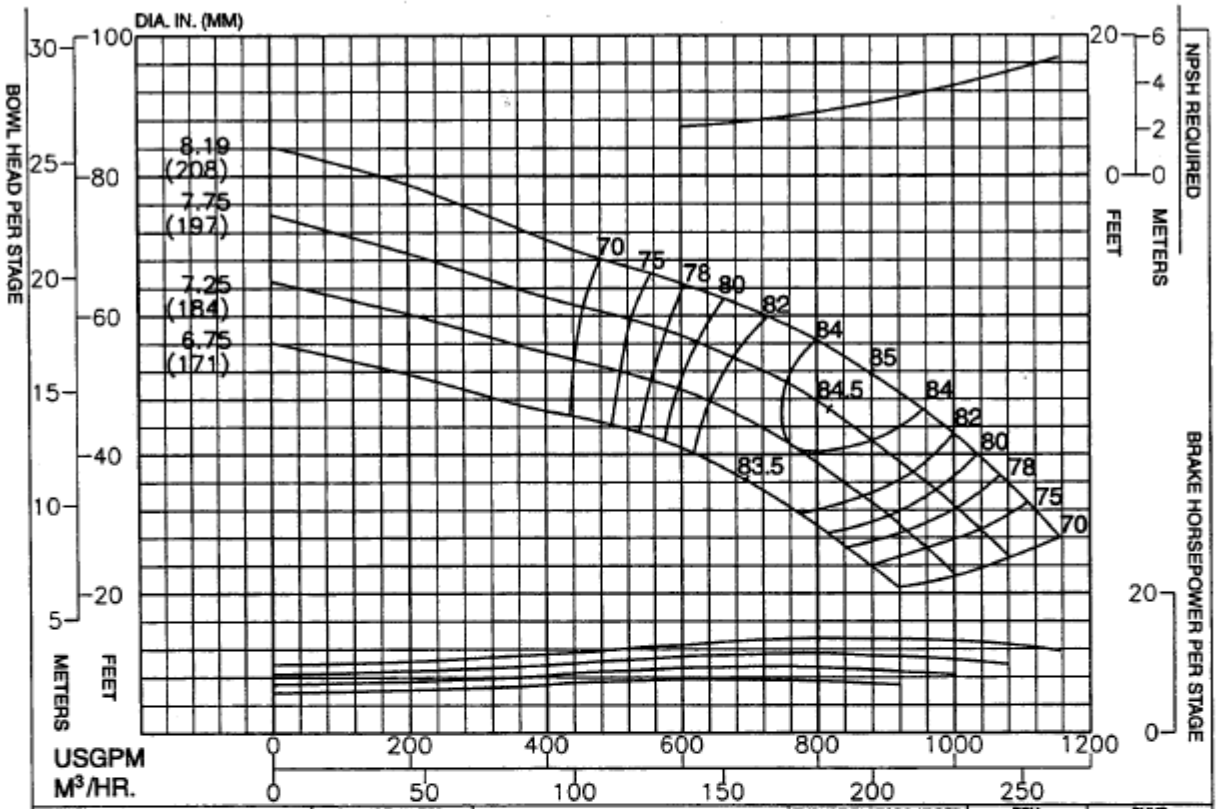

PERFORMANCE BASED ON PUMPING CLEAR WATER BELOW 85°F. WITH LISTED MATLS. COLUMN LOSSES NOT INCLUDED.	CHANGE IN EFF. STAGES	POINTS
	1	-3
	2	-2
BOWL - CAST IRON	3	-1
IMPELLER - BRONZE	4	0

THRUST FACTORS AT BEP		
IMPELLER	LBS/FT	KG/M
STANDARD	11.8	17.6
EYE AREA- 19.4 SQ. IN.		

RPM	PUMP
1770	12SKL
SEMIOPEN IMPELLER	CURVE NO.
N_s = 2720	EC-1926

Column	Nom. Size	Max. GPM	"A" Flanged	"B" Threaded
Optional	6"	600	9.38"	9.38"
Standard	8"	1500	11.50"	11.50"
Optional	10"	3000	13.50"	11.75"
RATINGS				
Max. Pressure = 539 psi based on Class 30 Iron bowls				
Impeller and Shaft Weight = 22.0 pounds per stage				
Pump Shaft	Diameter = 1.69 inches			
	Max. HP. = 288 with 416 SS Pump Shaft			
Line Shaft Size	1.00	1.25	1.50	1.69
Line Shaft H.P.	57	115	200	288

Additional Data	
Max. Operating Speed.	2500
Max. No. of Stages	12
Max. Sphere Size	.90
End Play	.52
WR 2 Per Stage	.656
Bowl Ring Clearance	N/A
Impeller Running Clearance (3)	.010 - .015

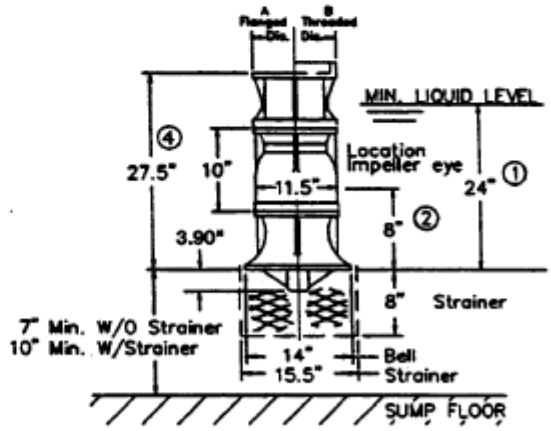

(1) Minimum submergence required to prevent vortex formation. The submergence needed to provide adequate NPSH to the first stage. Impeller may be greater or less than shown. The larger of the two values must be used to determine actual minimum allowable submergence.

(2) Location of eye of first stage impeller. Used to calculate NPSH. This is also the minimum priming submergence. (See note 1).

(3) Vertical Impeller to Bowl running clearance after shaft stretch.

(4) For Suction Case dimensions see sheets 20.25 and 20.28.

N/A–Not Available

All Specifications Subject to Change Without Notice.