SCS
National
Engineering
Handbook

Use bookmarks and buttons to navigate the document

Section 15

IRRIGATION

Chapter 8

IRRIGATION PUMPING PLANTS

Soil Conservation Service
United States Department of Agriculture

SCS NATIONAL ENGINEERING HANDBOOK

SECTION 15 IRRIGATION

CHAPTER 8 - IRRIGATION PUMPING PLANTS

CONTENTS

	Page
General	8-1
Centrifugal pumps	8-2
General	8-2
Operation	8-2
Characteristics	8-2
Characteristic curves	8-6
Data for selecting pump	8-6
Installation	8-8
Priming	8-11
Trouble Checklist	8-16
Pump fails to prime	8-16
Pump fails to develop sufficient pressure or capacity	8-17
Pump takes too much power	8-18
Pump leaks excessively at stuffing box	8-19
Pump is noisy	8-19
Deep-Well Turbine Pumps	8-19
General	8-19
Operation	8-19
Characteristic curves	8-21
Pump selection	8-23
Data for selecting pump	8-23
Installation	8-25
Submersible Pumps	8-25
General	8-25
Operation	8-27
Installation	8-27
Propeller Pumps	8-29
General	8-29
Axial flow	8-29
Mixed flow	8-29
Operating characteristics	8-29
Characteristic curves	8-31
Installation	8-34
Data for selecting pump	8-34

CONTENTS--Cont'd

	Page
Determining Operating Conditions	8-35
General	8-35
Determining head for centrifugal pumps	8-35
Determining head for deep-well turbine pumps	8-38
Determining head for propeller pumps	8-38
Drives	8-41
General	8-41
Direct drive	8-41
Belt drive	8-43
90° gear heads	8-43
Power takeoff	8-47
Cavitation	8-47
Booster pumps	8-51
Power for pumping	8-52
General	8-52
Electric motors	8-52
Stationary internal combustion engines	8-55
Tractor power	8-58
Power Requirements	8-59
General	8-59
Power requirements for electric motors	8-60
Power requirements for internal combustion engines	8-61
Cost of Pumping	8-62
General	8-62
Fixed costs	8-63
Operating costs	8-64
Summary	8-68

SCS NATIONAL ENGINEERING HANDBOOK

SECTION 15

IRRIGATION

CHAPTER 8 - IRRIGATION PUMPING PLANTS

FIGURES

Figure		Page
8-1	Horizontal centrifugal pump for surface or pit installation	8-3
8-2	Effect of speed change on centrifugal pump performance	8-5
8-3	Typical characteristic curve for horizontal centrifugal pump	8-7
8-4	Suggestions for installing centrifugal pumps	8-9
8-5	Priming with foot valve and water supply	8-12
8-6	Priming with foot valve and hand primer	8-12
8-7	Priming with exhaust primer	8-14
8-8	Priming with manifold primer	8-14
8-9	Priming by dry vacuum pump	8-15
8-10	Self-priming centrifugal pumps	8-15
8-11	Deep-well turbine pump	8-20
8-12	A, Typical characteristic curves for deep-well turbine pump operating at constant speed. B, Heads at which a typical 10-inch turbine pump will deliver 500 g.p.m. together with related factors of pump	8-22
8-13	Effect of change in operating conditions on pump efficiency	8-24
8-14	Deep-well turbine pump installation	8-26
8-15	Submersible pump	8-28
8-16	Propeller pumps	8-30
8-17	Clearance required for propeller pump	8-32
8-18	Typical characteristic curves for an 18-inch axial-flow single-stage propeller pump with three different type propellers	8-33
8-19	Example of determining head for centrifugal pumps	8-36
8-20	Example of determining head for turbine pumps	8-39
8-21	Example of determining head for propeller pumps	8-40
8-22	Examples of direct drive	8-42
8-23	Examples of flat-belt drive	8-44
8-24	Rules for determining size and speed of pulleys, sheaves, gears, or sprocket wheels	8-45
8-25	Examples of V-belt drives	8-46
8-26	Examples of right-angle gear head drives	8-48
8-27	Examples of power-takeoff drives	8-48
8-28	Correct and incorrect power-takeoff shaft alinement	8-49
8-29	Horsepower output of an internal combustion engine	8-56

SCS NATIONAL ENGINEERING HANDBOOK

SECTION 15

IRRIGATION

CHAPTER 8 - IRRIGATION PUMPING PLANTS

TABLES

Table		Page
8-1	Maximum design static siphon lift in feet	8-37
8-2	Efficiencies of electric motors operating at full speed	8-61
8-3	Pumping plant depreciation	8-64
8-4	Electric motor power costs	8-67

SECTION 15

IRRIGATION

CHAPTER 8. IRRIGATION PUMPING PLANTS

General

The pumping plant is essential in many irrigation systems. Pumping conditions usually determine the type of pump that should be used. The irrigation pump must be fitted to the water supply and to the job to be accomplished if high efficiencies are to be obtained. Its selection must be accurately made to secure desired results and economical operation.

Several different types of pumps are available to meet the needs of irrigation. These include the centrifugal, turbine, propeller airlift and piston or reciprocating pumps. The centrifugal, turbine, and propeller pumps are the types commonly used for irrigation pumping.

Centrifugal pumps usually give efficient operation over a relatively wide range of operating conditions when pumping against total heads exceeding approximately 12 feet. The centrifugal pump sucks the water from the source of supply to the pump. It is, therefore, limited to locations and conditions where this distance is within the limits of suction. This limitation will be discussed under the section on determining suction lifts for centrifugal pumps.

Because it operates successfully under any head, the deep-well turbine pump is best adapted to use in wells. It is used in installations where centrifugal pumps cannot be set near the water surface.

The propeller pump is adapted to delivering a large quantity of water under low heads. It is adapted to surface irrigation where large streams at low heads are required. The propeller pump also is used extensively in pumping for drainage.

For deep wells with relatively high static water levels, the airlift pump is of limited application. The initial cost is generally lower than that for other types of pumps, but the operating efficiencies are rather low.

The piston or reciprocating pump is no longer used extensively in irrigation. This pump is efficient for relatively small capacities at high heads.

Centrifugal Pumps

General.

Centrifugal pumps are built in two types--the horizontal centrifugal and the vertical centrifugal. The horizontal type has a vertical impeller connected to a horizontal shaft. The vertical centrifugal pump has a horizontal impeller connected to a vertical shaft.

Both types of centrifugal pumps draw water into their impellers, so they must be set only a relatively few feet above the water surface. In this respect the vertical type has an advantage in that it can be lowered to the depth required to pump water and the vertical shaft extended to the surface where power is applied. The centrifugal pump is limited to pumping from reservoirs, lakes, streams, and shallow wells where the total suction lift is not more than approximately 20 feet.

The horizontal centrifugal (fig. 8-1) is the one most commonly used in irrigation. It costs less, is easier to install, and is more accessible for inspection and maintenance; however, it requires more space than the vertical type. To keep the suction lift within operating limits, the horizontal type can be installed in a pit but it usually is not feasible to construct watertight pits more than about 10 or 15 feet deep. Electrically driven pumps are best for use in pits because they require the least cross-sectional area.

The vertical centrifugal pump may be submerged or exposed. The exposed pump is set in a watertight sump at an elevation that will accommodate the suction lift. The submerged pump is set so the impeller and suction entrance are under water at all times. Thus, it does not require priming. But maintenance costs may be high as it is not possible to give the shaft bearings the best attention. Pumps of this kind usually are restricted to pumping heads of about 50 feet.

Operation.

The centrifugal pump operates on the principle of centrifugal action. In a centrifugal pump, a motor or other driver rotates an impeller fitted with vanes immersed in water and enclosed in a casing. Water enters the case at the center and is immediately engaged by the impeller which is in rapid rotation. This rotation causes a flow from the center of the impeller to its rim or the outside of the case where pressure head is rapidly built up. To relieve this pressure, the water escapes through the discharge pipe. The centrifugal pump will not operate until the case is entirely full of water or primed. The need of priming is one of the disadvantages of the horizontal centrifugal pump.

Characteristics.

The principal characteristics of a centrifugal pump are:

1. Smooth, even flow--easy on pump, motor, piping, and foundation.

2. Adapted to high-speed operation and to different speeds.

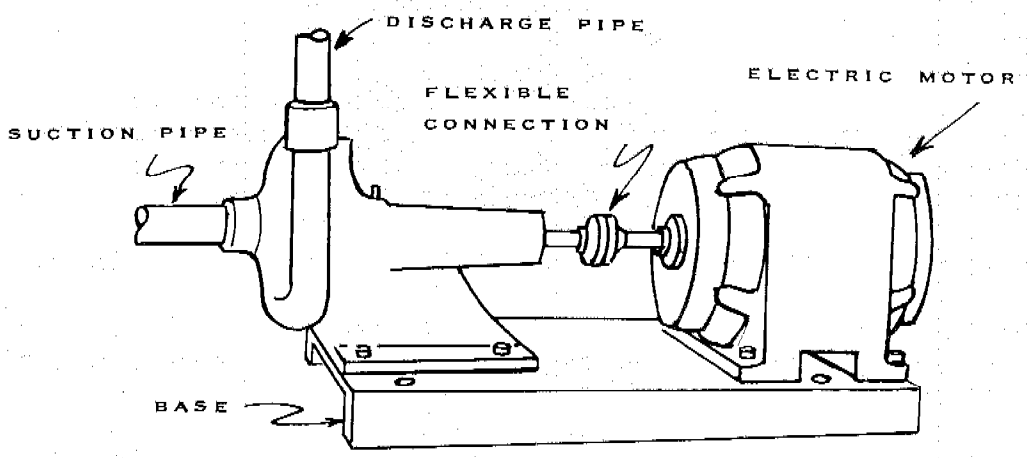

DIRECT CONNECTED HORIZONTAL CENTRIFUGAL PUMP

INTERNAL COMBUSTION OR ELECTRIC MOTOR MAY BE USED

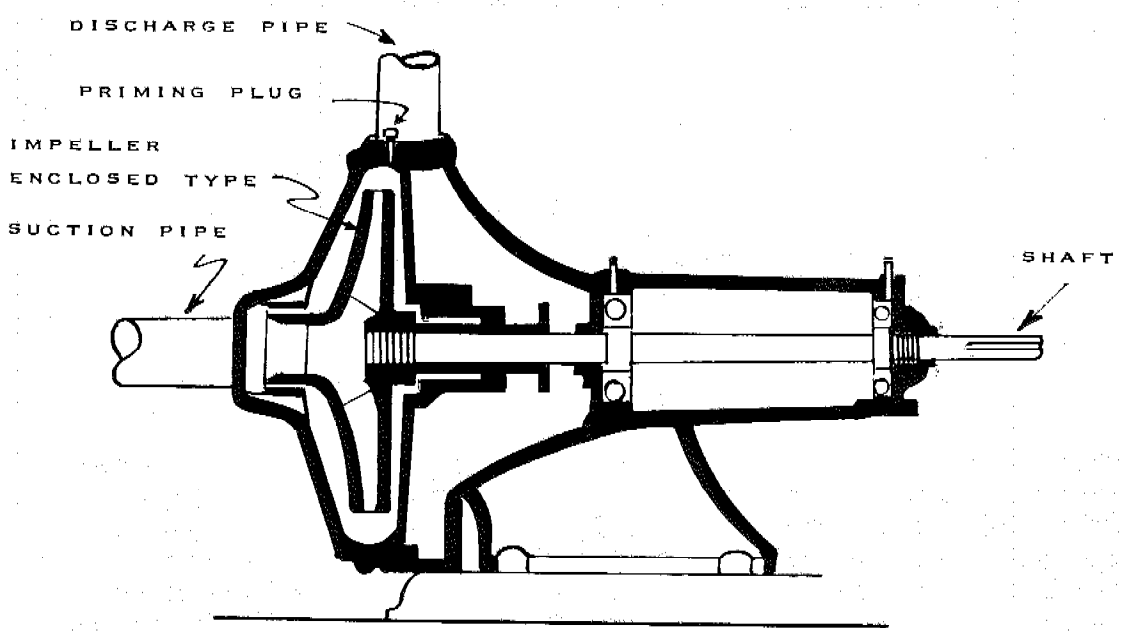

CROSS SECTION OF MODERN HORIZONTAL CENTRIFUGAL PUMP

SINGLE SUCTION ENCLOSED IMPELLER

Figure 8-1.--Horizontal centrifugal pump for surface or pit installation.

3. Nonoverloading of power unit with increased heads but there may be some danger of overloading if head is decreased.

4. Capacity and head depend upon r.p.m. and impeller diameter and width. In a given pump, the capacity and head will vary according to the individual operating characteristics of that pump; that is, an increase in head reduces the capacity and vice versa.

5. Horsepower is a function of capacity, head, and pump efficiency.

6. When the speed is kept constant, capacity decreases as head increases and power is reduced. Likewise, when the head is reduced, capacity increases and power goes up.

7. When the operating speed is changed (fig. 8-2) the capacity will change in direct proportion to the variation in speed. At the same time, the head will vary as a square of the change in speed while horsepower will change as the cube of the change in speed. This is represented by the following formula (variable speed-diameter constant):

$$\frac{\text{r. p. m.}_1}{\text{r. p. m.}_2} = \frac{\text{cap.}_1}{\text{cap.}_2} = \frac{\sqrt{\text{head}_1}}{\sqrt{\text{head}_2}} = \frac{\sqrt[3]{\text{hp}_1}}{\sqrt[3]{\text{hp}_2}}$$

8. When it is necessary to vary the characteristics of a pump operating at constant speed, the same relationships expressed in 6 hold except that here it is the diameter of the impeller that is changed. Then the capacity varies directly with the diameter; the head varies as a square of the diameter; and the horsepower varies as a cube of the diameter. This is expressed by the following formula (variable diameter-constant speed):

$$\frac{\text{dia.}_1}{\text{dia.}_2} = \frac{\text{cap.}_1}{\text{cap.}_2} = \frac{\sqrt{\text{head}_1}}{\sqrt{\text{head}_2}} = \frac{\sqrt[3]{\text{hp}_1}}{\sqrt[3]{\text{hp}_2}}$$

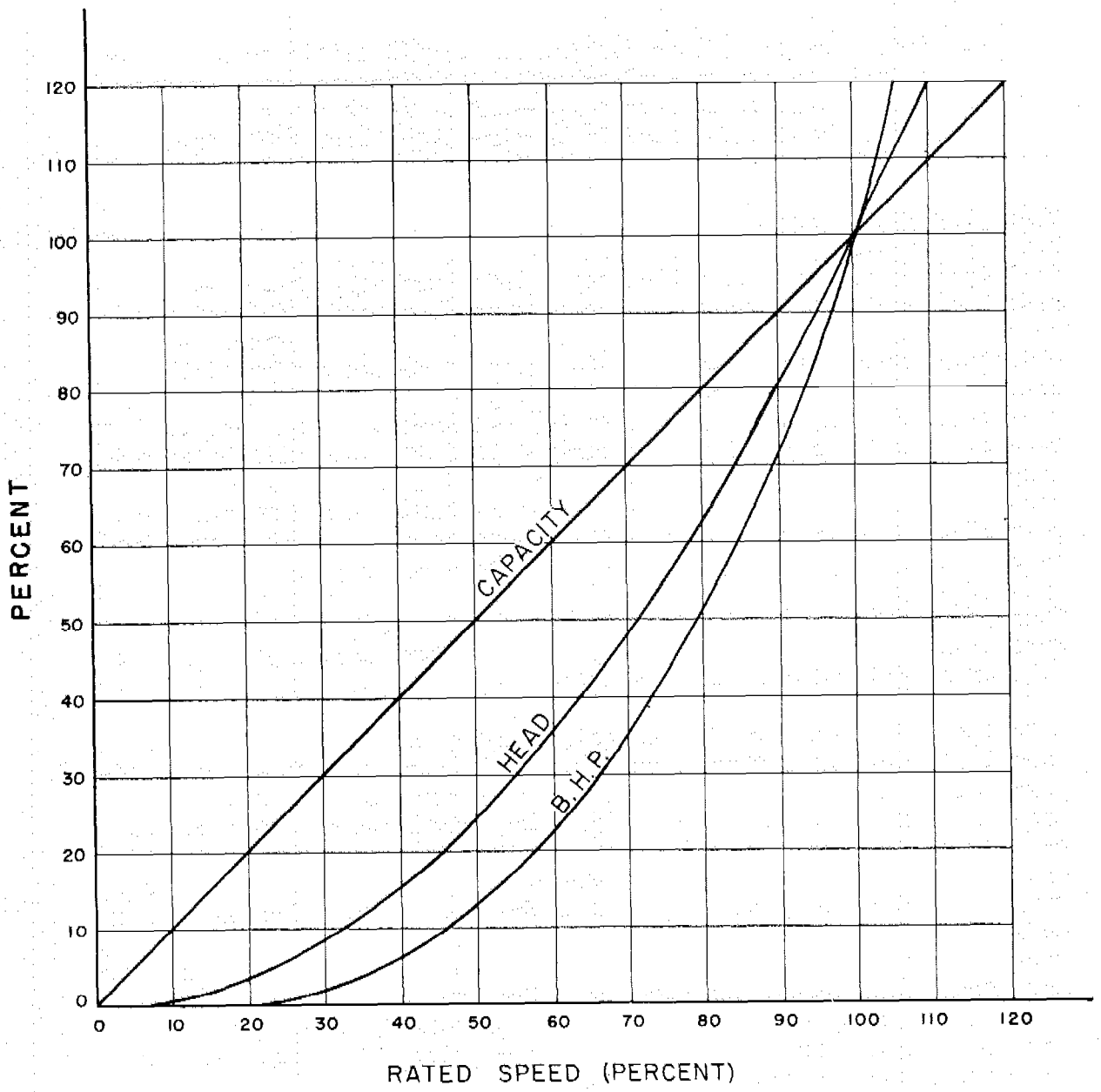

Figure 8-2.--Effect of speed change on centrifugal pump performance.

9. These changes (7 and 8) take place with little or no change in efficiency for small changes in speed and impeller diameter (maximum increase of speeds of about 5 percent). For large changes in speed or impeller diameter, the efficiency will be reduced.

Characteristic Curves.
For a particular job, the best selection of a pump will be one that will operate at its peak efficiency. Unfortunately, this is rarely possible for there is only one capacity and one head condition for each pump where the highest efficiency is obtained. Because it is obviously impossible for any manufacturer to design and build the many pumps required to meet all operating conditions, manufacturers have settled upon standard designs for required head and capacity ranges. A well-designed and integrated line of pumps will be so arranged that it is possible to select some pump from the line for any condition and obtain an efficiency that is within a few percentage points of the maximum. Characteristic curves are available and should be used to select the best pump for the particular job.

These curves have been developed at the factory after exhaustive tests during which the water capacity, pressure, power input, etc., are carefully measured and plotted on a curve.

A full set of characteristic curves includes, in addition to the head-capacity curve for different speeds, an efficiency curve and a horsepower curve (fig. 8-3). The head-capacity curve for the constant speed of the pump represents the varying quantities of water delivered by the pump with variations in head. Head-capacity curves for different recommended speeds of the pump are shown. The horsepower curve shows the amount of power required to drive the pump. The efficiency curve shows the amount of usable work done by the pump in percent of power delivered to the pump shaft. Efficiencies may be determined for any given head, speed, and capacity. The pump selected should be within the range of greatest efficiency. Pumps of identical design will have practically identical characteristics with only slight differences due to unavoidable foundry variations.

Data for Selecting Pump.
The following information usually is needed by the pump manufacturer to furnish the correct size and type of pump for a particular installation:

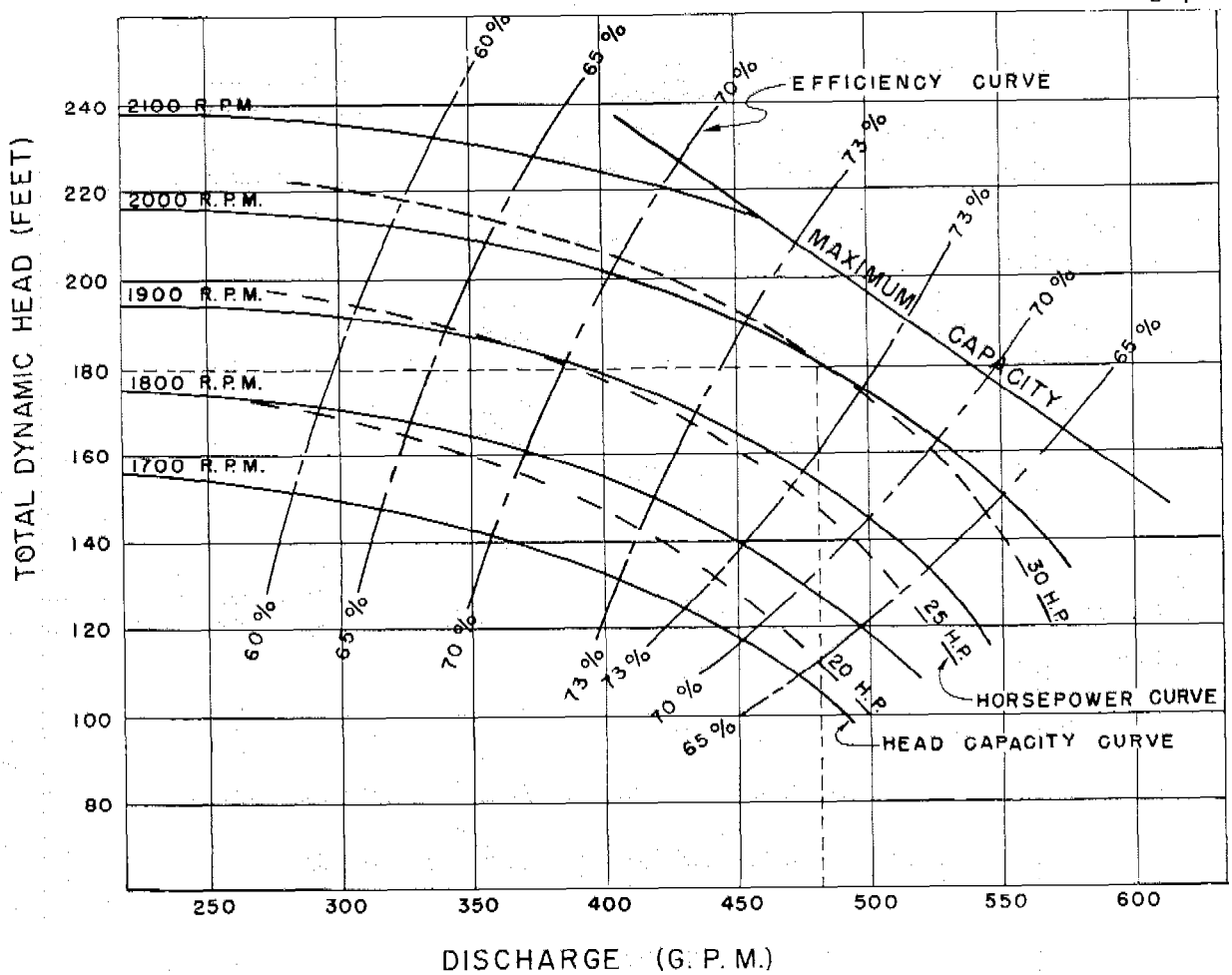

EXAMPLE IN USE OF CURVE-

Required:

A pump and power unit capable of delivering 480 g.p.m. at 180' of head.

Solution:

It is important to choose a pump that will operate near its highest efficiency most of the time. The pump represented by the above curve will satisfy this condition. Find 180' of t. d. h. on the left side of curve, follow the dotted line to its intersection with the 480 g.p.m. line extending up from the bottom. The intersection of the vertical and horizontal dotted lines indicates that this pump will be satisfactory if operated at 2000 r. p.m. It will then operate at its highest efficiency of 73 percent and will require a power unit capable of producing 30 h.p. or greater to the pump shaft at 2000 r. p. m.

Figure 8-3.--Typical characteristic curve for horizontal centrifugal pump.

Source of water supply . . . . . _____
Vertical suction lift . . . . . _____ft.
Length of suction pipe . . . . . _____ft.
Number and kinds of bends required . . . . . _____
Foot valve and strainer. . . . . _____
Static discharge lift . . . . . _____ft.
Discharge head required . . . . . _____ft.
Discharge capacity of pump . . . . . _____g.p.m.
Pump location: Movable_____ Permanent _____
Type of driver: Electric _____Voltage_____Phase_____Cycle_____
Gasoline _____Diesel_____
Power Takeoff_____Natural or L.P. gas_____
Power unit: Separate from pump_____Combined with pump_____

Installation.
For a centrifugal pump to continue to operate at its designed efficiency and also to prolong the life of the equipment, the pump should be correctly located, have a good foundation, and be properly alined. The following factors should be considered in locating the pump:

1. Easily accessible both for inspection and maintenance.

2. Covered to protect it from the elements. A house can be used on permanent installations. In the case of a house, available headroom should be provided for servicing the equipment.

3. Safeguarded against flood conditions unless a wet pit-type pump is used.

4. Placed as close as possible to the water supply so as to make the suction line short and direct.

Pumping units that are to be installed in a permanent location provide the opportunity for developing the best type of foundation (fig. 8-4). Concrete is the best material for constructing a good pump foundation. The pump unit should be securely fastened to the foundation. A recommended method of setting the foundation bolt is shown. The coupling between the pump and power unit must be in correct alinement regardless of the type of coupling. Figure 8-4 shows how a coupling can be checked for alinement with a steel straightedge. When the coupling is by a shaft and double universal joint, a shield should be placed over and around the two horizontal sides to protect the operator from the fast-moving shaft.

To operate properly, the pump must be at a level position at all times. Figure 8-4 shows how 4 to 6 wedges can be used to raise the entire pumping unit about 3/4-inch above the foundation. The wedges can then be adjusted as necessary to bring the pump into a level position. After the pump has been leveled, a dam should be built at least 2-1/2 inches high around the base plate; then concrete poured in to required depth and allowed to harden thoroughly. The wedges may be left in place. When the concrete is hardened, the foundation bolt should be tightened

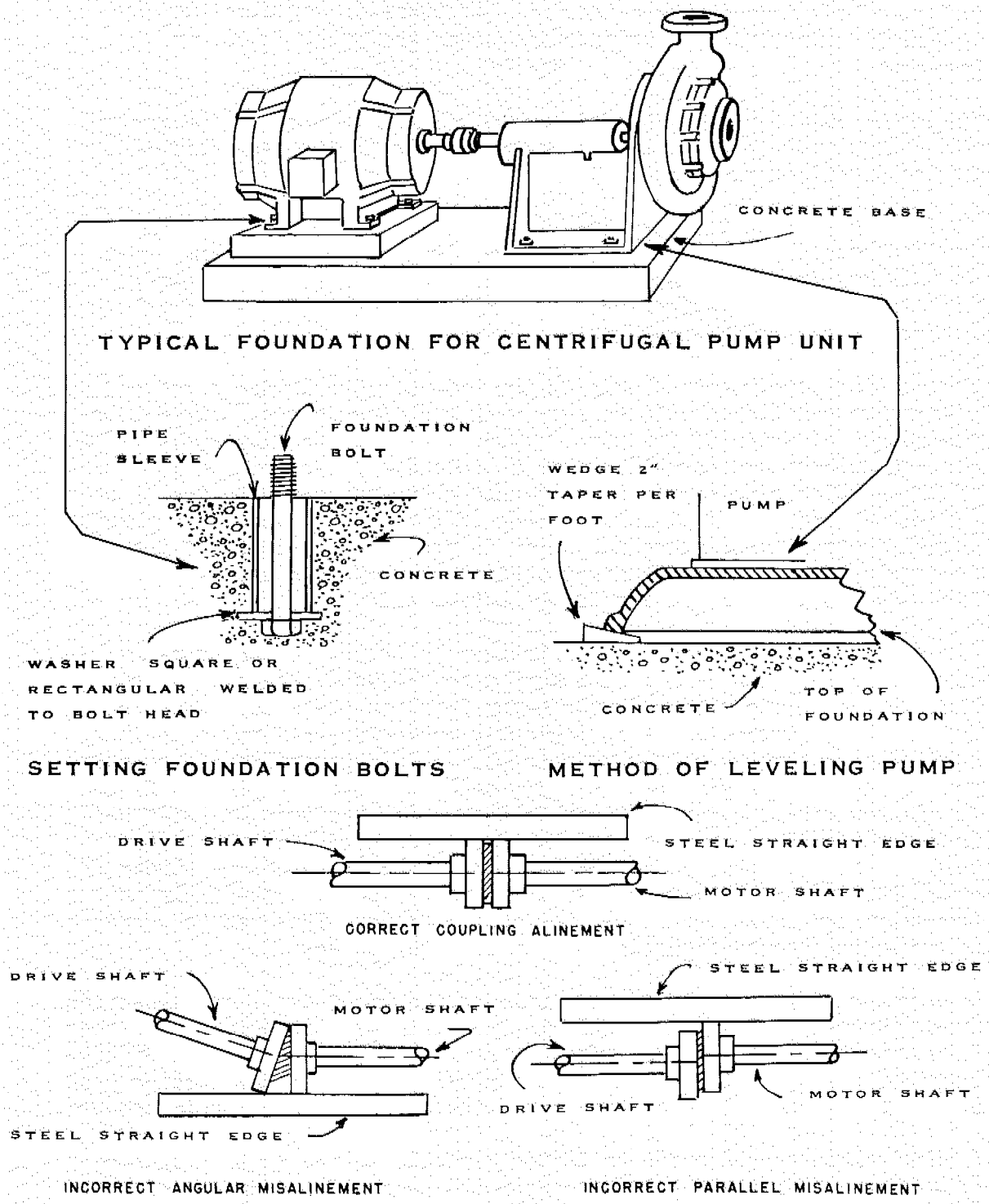

Figure 8-4.--Suggestions for installing centrifugal pumps.

and a recheck made of the alinement. If there is any misalinement, it can be corrected by placing shims under the pump, motor, or brackets.

The motor should now be checked to see that it rotates in the proper direction. The rotation of the motor must be in the same direction as the arrows on the pump casing.

It is important that pumps line up naturally with their power unit and piping. Pipes should not be forced into place with flange bolts as this may draw the pump out of alinement. Suction and discharge pipelines should be supported independently of the pump so as not to put any strain on the pump casing.

The suction pipe, particularly in the case of long intake pipes and high suction lifts, should be laid with a uniform slope, upward from the source of water to the pump. There should be no high spots where air can collect and cause the pump to lose its prime. The inlet end of the suction pipe should be suspended above the earth bottom of a stream or pond or laid in a sump made of concrete or metal. On horizontal suction lines where a reducer is used, it should be of the eccentric type with the straight section on the upper side of the line and the tapered section on the bottom side.

Air may enter the suction pipe entrained in the water, or by means of whirlpools which form in the sump when the water velocity is too high in the intake pipe. If the water level in the sump is too low, or the inlet nozzle is not sufficiently submerged, air may enter the suction pipe through vortex or whirlpool. This generally can be overcome by using a larger suction pipe, especially if the pipe is flared. In shallow water, a mat or float located above the suction inlet will reduce the vortex. Pipe sizes should be increased until the water velocity is less than 3 feet per second at the entrance. A stream of water falling into the sump near the intake pipe will churn air into the water and cause trouble in the suction line. This can be overcome by extending the suction line deeper into the water.

When water must be pumped from a well or a sump of small cross-sectional area, the water will tend to rotate, and this will interfere with the flow into the suction line. This is particularly true in cylindrical sumps or wells. A baffle placed on opposite sides of the suction pipe and at right angle to the rotation of the water overcomes this trouble.

A short elbow should never be bolted directly to the suction opening of a pump. Such a sharp bend so near the pump inlet causes a disturbance in the waterflow and may result in noisy operation, loss of efficiency, and heavy end thrusts. This is particularly true when the suction lift is high. If it is necessary to make a bend in the suction line, it should be in the form of a long sweep or long radius elbow and should be placed as far away from the pump as is practicable.

Screens or strainers should be used to exclude debris from the suction line. If the source of water contains large amounts of small debris, a screen placed around and 2 or 3 feet from the inlet of the suction hose will provide good protection and be less likely to clog. Strainers are generally small and are fastened to the end of the suction pipe. They are satisfactory in relatively clear water.

In some cases, it is not possible to locate the centrifugal irrigation pump in a permanent location. It may be needed in more than one location on the farm. This increases the difficulty of providing a proper foundation. Portable pump units generally are mounted on wheels or skids. It is highly important to locate this type unit so that it is level, is on firm ground, and is securely staked in place so that it will not shift during the time it is operating.

In pumping from rivers with moderately sloping banks, the horizontal centrifugal pump may be mounted on skids, on sloping timbers or track so that it can be removed quickly from floods. This method also can be used where the water level fluctuates sufficiently to be out of range of suction lift if the pump were installed in a permanent location. With steep banks it may be necessary to build a foundation platform secured to piling or to place the pump unit on a floating barge or boat.

Priming.

Centrifugal pumps, due to their nonpositive action, must be primed before the pump will operate. They will not lift water from a source of supply unless the pump casing and the suction pipe are both full of water. This can be accomplished by one of the following priming methods that are generally used in irrigation pumping:

1. By use of a foot valve and water from an outside supply (fig. 8-5). The outside supply must be large enough to keep the pump and suction line filled until the pump is primed. To prime, close discharge gate valve, open air vent valve, and open gate valve in supply line until all air is expelled and water issues from vent openings. Close valve in supply line, close air vent valves, and start pump; then open discharge gate valve.

2. By separate hand-controlled priming pump and foot valve (fig. 8-6). The hand-priming pump is a simple, high-speed air pump with its primer suction inlet connected to the priming part of the centrifugal pump. If connection is made on the pump discharge, a valve must be installed in the priming line. The pump handle is used to actuate a diaphragm in the priming-pump chamber. Air is drawn into the chamber from the centrifugal pump through a suction valve on the "upstroke" and discharged through a discharge valve on the "downstroke." To prime the pump, close the discharge gate valve and air vent valve. Open valve in priming line. Exhaust air from pump and suction piping until water flows from priming pump. Close valve in priming line, start centrifugal pump, and open discharge gate valve.

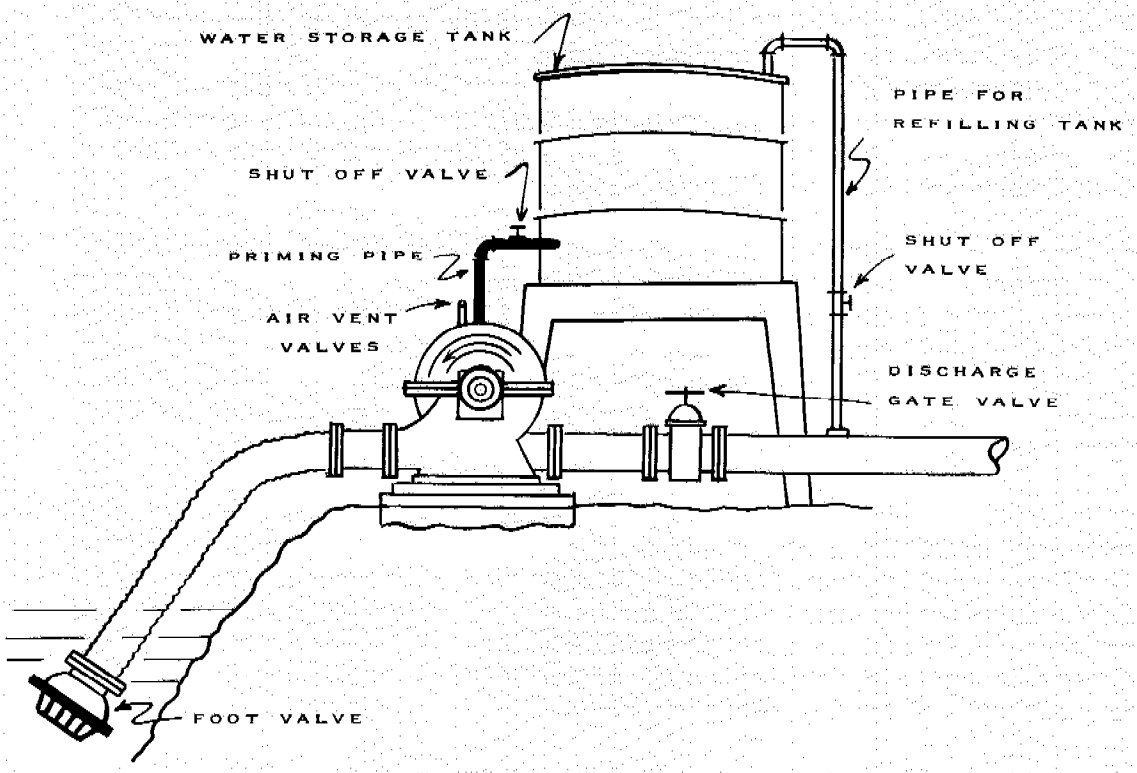

Figure 8-5.--Priming with foot valve and water supply.

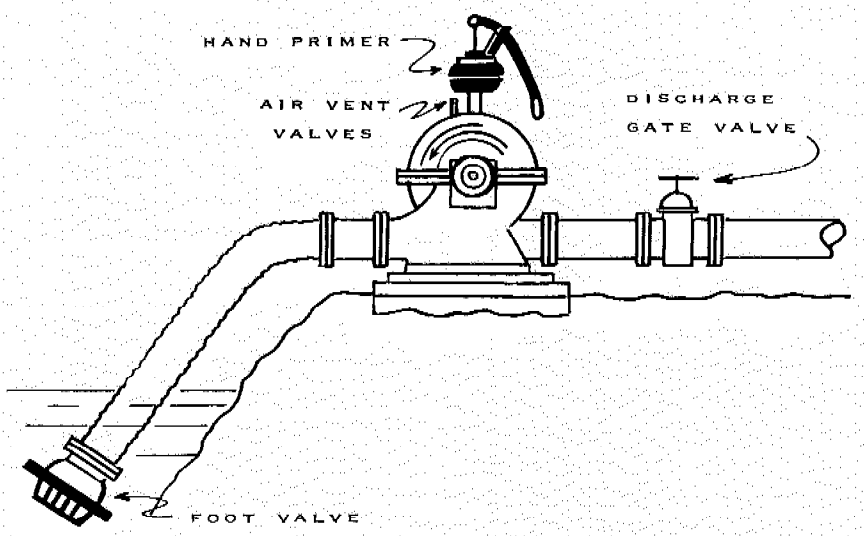

Figure 8-6.--Priming with foot valve and hand primer.

3. By engine exhaust (fig. 8-7). Pumps powered by combustion engines can be primed by a device utilizing the engine's exhaust gas. It is known as an ejector primer. This device is essentially a velocity pump for the removal of air from the centrifugal pump and the suction line by the entraining action of a rapidly moving jet of exhaust gas from the engine. With the ejector primer, a check valve or gate valve is used on the discharge side of the pump to prevent the entrance of additional air into the pump casing during priming. A small tube with a shutoff valve connects the ejector to the pump casing, forming a passageway for air removal.

   To prime the pump, close the discharge gate valve, open the shutoff valve, and start the engine. Hold the handle of the primer down on the exhaust valve to close it. Exhaust gas is now bypassed through the ejector. The rapidly moving exhaust gas expanding and contracting in passing through the ejector nozzle and Venturi tube entrains air in the mixture at the induction chamber. The continued entraining effect rapidly removes air from the pump casing, and water is drawn into the suction pipe and pump casing.

   As soon as the pump is primed, water vapor discharges from the Venturi tube. Then open the discharge gate valve if one is used instead of a check valve; start the pump and close the shutoff valve in the primer. After priming has been completed, the primer handle should be laid over 180° from the priming position to permit the exhaust valve to float in the exhaust stream.

4. By manifold primer (fig. 8-8). The manifold primer can be used on a wide variety of combustion engines which operate on gasoline, natural or LP gas and have four or more cylinders. This primer uses the engine manifold vacuum to evacuate air from the pump casing and suction line. It is equipped with a float valve that provides instant and positive closure as soon as priming is complete to prevent reverse flow during normal pump operation. The manifold primer is almost automatic on most installations; however, it is generally furnished with a reset switch to open the float valve any time it closes prematurely.

   To prime pump, close discharge gate valve, run motor at slow speed, and open shutoff valve of primer. When pump is full of water, close shutoff valve, accelerate engine, and open discharge gate valve.

5. By dry vacuum pump (fig. 8-9). Priming by this method involves the use of a dry vacuum pump powered by an auxiliary motor or belted or geared-to-the-pump motor to evacuate air from the pump casing and suction line. The installation requires a float-controlled air-release valve which will permit air to pass, but will close when water fills the chamber to prevent

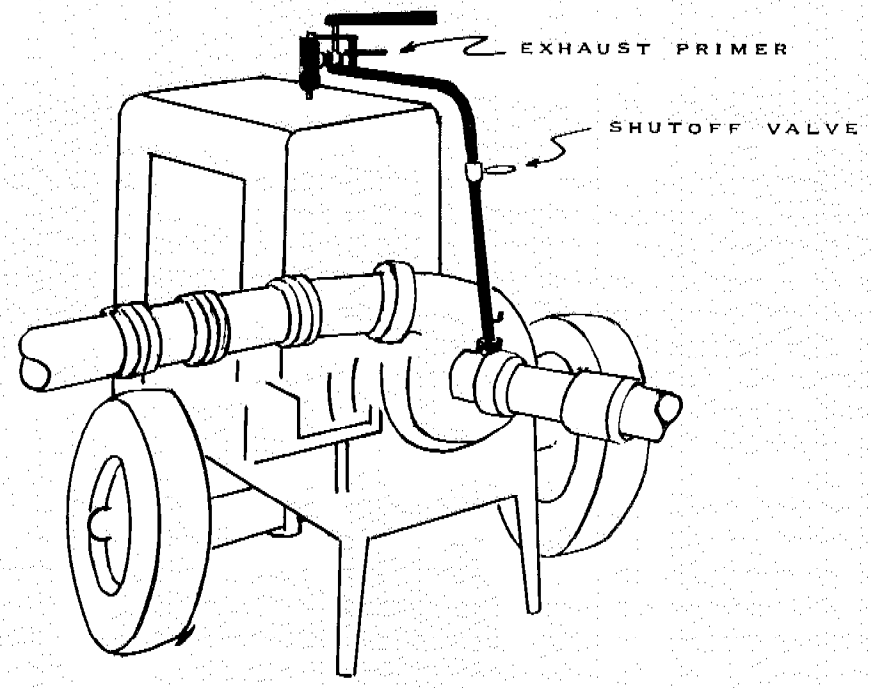

Figure 8-7.--Priming with exhaust primer.

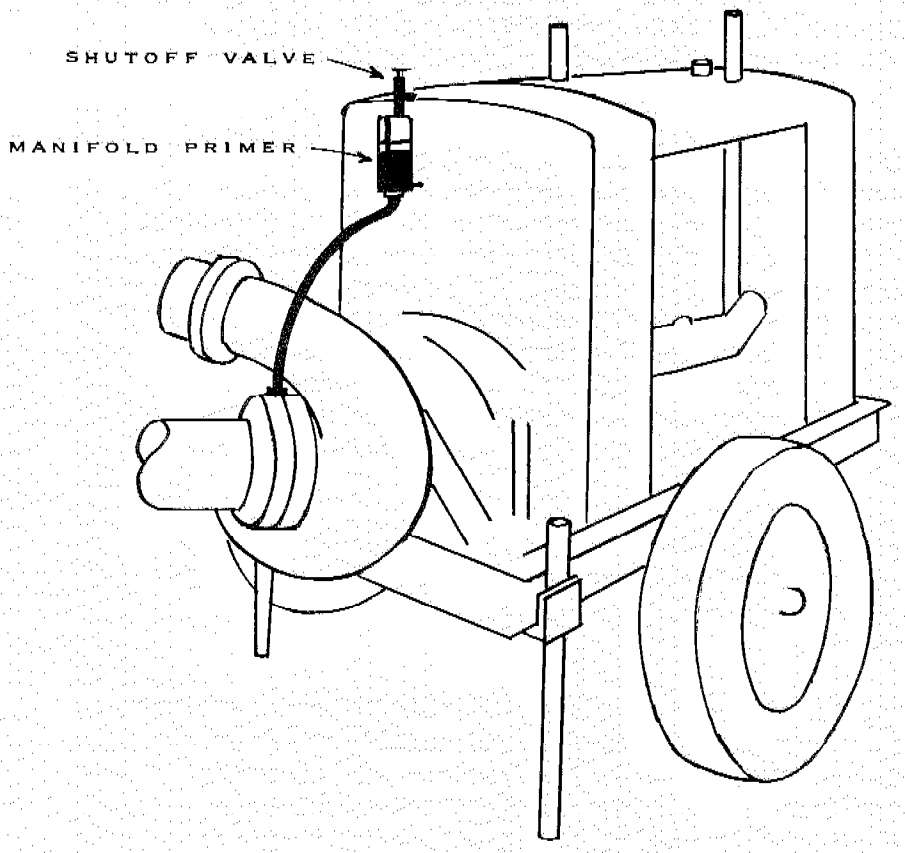

Figure 8-8.--Priming with manifold primer.

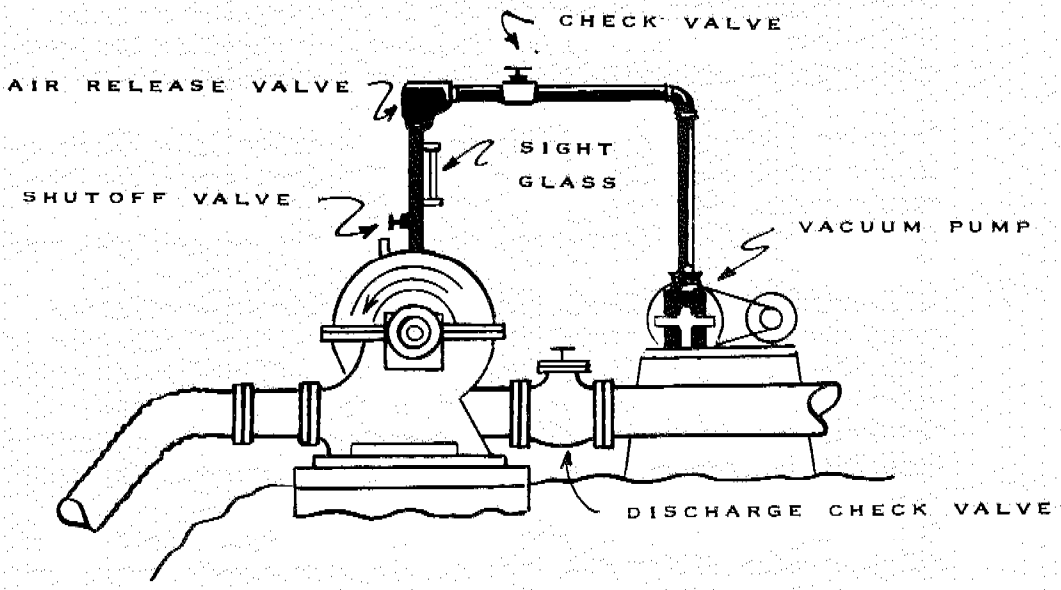

Figure 8-9.--Priming by dry vacuum pump.

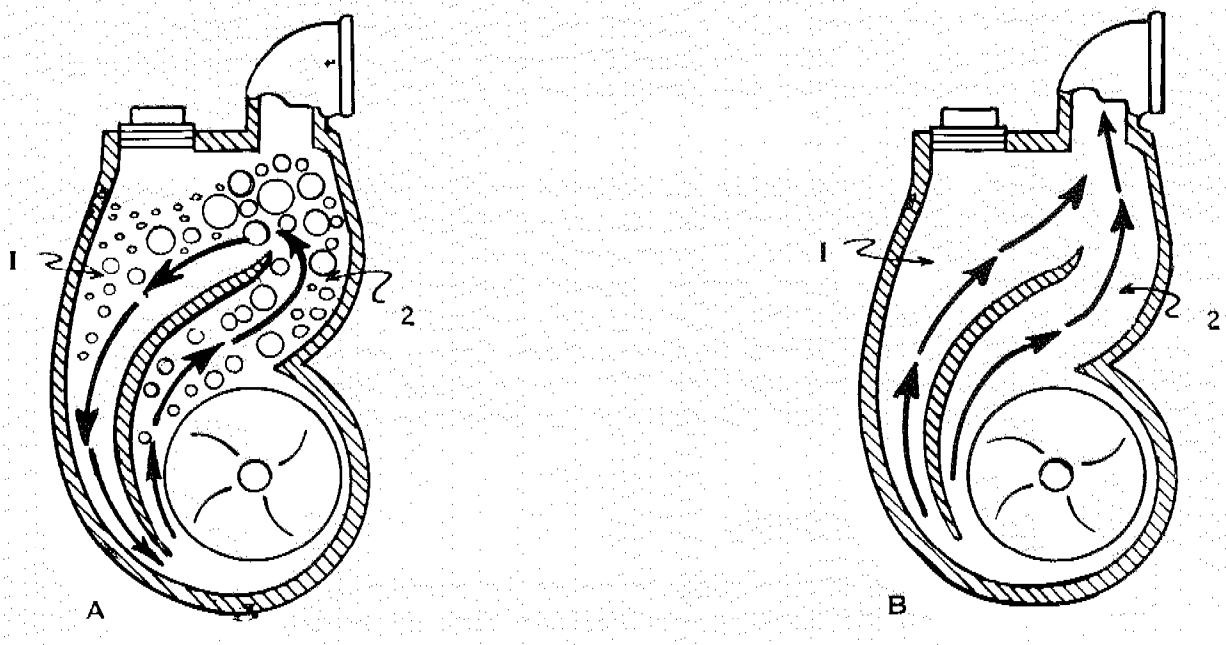

Figure 8-10.--Self-priming centrifugal pumps.

water being drawn into and damaging the dry vacuum pump. A water-level indicator or sight glass, as shown in the drawing, will help to determine when the pump is primed.

To prime pump, open the discharge gate valve if a check valve is not used, open the primer shutoff valve, and start the vacuum pump. When the pump is primed, close the shutoff valve, stop the vacuum pump, and start the centrifugal pump.

6. Self-priming centrifugal pumps. Self-priming centrifugal pumps are made by several manufacturers. With this type of pump the pump chamber and hopper must be first filled with water. Therefore, its advantage is primarily confined to the smaller size pump. They are used extensively by contractors but are generally limited to small irrigation systems.

   After the pump is filled with water, the engine is started, and the water within the impeller is discharged upward into the chamber (fig. 8-10, A). This action instantly creates a vacuum at the impeller eye. Air from the suction line and water within the pump rush into this void. They are mixed at the impeller periphery and discharged upward into the chamber where the air escapes from the water. The force of gravity pulls the heavier air-free water down to the impeller. More air is entrained and the cycle is repeated until the pump is primed.

   When the pump is primed and pumping channels 1 and 2, shown in fig. 8-10, B, become one common discharge channel, the water is no longer circulating within the pump while pumping. The pump is equipped with a check valve at the suction inlet to the pump, and thus the pump is always full of water and priming is automatic after the pump is once filled by hand.

Trouble Checklist.

When the centrifugal pump fails to operate or the discharge or pressure drops, the cause of trouble should be investigated immediately and steps taken to eliminate it. Investigation shows that the majority of troubles with centrifugal pumps, except mechanical failures, can be traced to the suction line, its joints, elbows, foot valves, and other accessories. Air leaks in the suction line must be eliminated to attain the maximum suction lift for a given installation. The following checklist will be helpful in locating the cause of the trouble:

Pump fails to prime.

1. Failure of the pump to prime is mostly occasioned by an air leak in the suction line or in the pump.

2. The most common sources of air leaks are in the threaded connection of the suction line. Coat these connections with pipe cement or white lead and then draw them tight. All connections provided with gaskets must be drawn up tight.

3. The check valve on the discharge side of the pump may have debris lodged between the rubber flap and the valve seat. This will prevent the valve from sealing and forming an air-tight joint.

4. Occasionally, gaskets shrink and admit air into the pump. Tightening the flanges or connections will remedy this difficulty.

5. Rotary shaft seals may leak air if improperly greased or worn. Check this by running the pump and squirting oil on the shaft just outside the seal. If oil is drawn into the seal, a leak is indicated. Filling the seal with grease may eliminate the difficulty, but if the parts are worn, repairs may be necessary. If the seal is always kept full of the proper grade of grease, little, if any trouble will be encountered.

6. Connections in the priming line between the pump and primer must be air-tight or the pump will fail to prime.

7. Screw tight all drain and fill plugs in the pump case to prevent air leaks.

8. A plugged suction line or a collapsed suction hose liner is a frequent source of priming difficulties. Do not overlook this possibility.

<u>Pump fails to develop sufficient pressure or capacity</u>.

1. Check pump speed. The capacity of the pump will vary directly with speed, and pressure will vary with the square of the speed. This means that increasing the speed 20 percent will increase the capacity 20 percent and the head 44 percent. On internal engines, check the governor and adjust if necessary. With electric motors, check to see if motor is across line, wiring correct and receiving full voltage.

2. Check the suction line, strainer, and foot valve. They may be clogged with debris. A frequent source of difficulty is a collapsed suction-hose liner which has the effect of reducing the capacity and pressure the pump develops. The foot valve may be too small or not immersed deep enough to prevent air being drawn in with the water.

3. Check for air leaks in pump or suction line. Air leaks in the suction line or in the pump will occasion a reduction in both capacity and pressure. A small air leak which is not great enough to prevent the pump from priming may reduce both capacity and pressure.

4. Check suction lift. If the suction lift is too high, reduction in capacity will occur. Lifts of more than 20 feet are definitely too high for efficient operation, and the closer the pump can be located to the source of supply, the better will be the results obtained. Refer to Determining Operating Conditions, and discussion on computing suction lift.

5. Check length of suction lines. Long suction lines have the same effect as a high suction lift because of the increased friction when the water passes through the line.

6. Check for worn parts. Worn parts, such as impeller wear rings, will reduce both capacity and pressure. The impeller may be damaged or the casing packing defective.

7. Check impeller for clogging. If the impeller is plugged with foreign material, a reduction in both capacity and pressure will occur.

8. Check piping layout. It is characteristic of centrifugal pumps operated at constant speed that as the pressure is increased, the capacity decreases. In those cases where the pump pressure and capacity are in accordance with the characteristic curve, and when the speed of the engine cannot be increased, if necessary make some alterations in the pipeline so as to reduce the frictional resistance and thereby increase the capacity of the pump.

<u>Pump takes too much power</u>.

1. Check speed of pump. If it is higher than rating, reduce speed to pump rating.

2. Head may be lower than pump rating, thereby pumping too much water.

3. Check for mechanical defects such as bent shaft, binding rotating elements, too tight stuffing box, or misalinement of pump and driving unit.

Pump leaks excessively at stuffing box.

1. The packing may be worn or not properly lubricated.

2. The packing may be incorrectly inserted or not properly run in.

3. Packing is not the right kind or the shaft may be scored.

Pump is noisy.

1. Hydraulic noise-cavitation-suction lift is too high. Check this with a gage.

2. Check for mechanical defects such as bent shaft; binding rotating parts; loose, broken, or worn-out bearings; or misalinement of pump and driving unit.

Deep-Well Turbine Pumps

General.
The deep-well turbine pump used in irrigation is adapted for use in cased wells or where the water surface is below the practical limits of a centrifugal pump. Successful installations have been made where the water surface was 500 feet below the ground. Turbine-pump efficiencies are comparable with those of a good horizontal centrifugal pump. They will give long and dependable service if properly installed and maintained. However, they are usually more expensive than centrifugal pumps and are more difficult to inspect and repair.

Turbine pumps are classified by the type of flow produced by the impeller. The centrifugal type discharges water at right angles to the axis of rotation. In the axial-flow type, the water is given an upward thrust by the impeller similar to a boat propeller. Another type commonly used is a combination of axial-flow and centrifugal and is known as a mixed-flow turbine (fig. 8-11).

Operation.
The turbine has three main parts: the head, the pump bowl, and the discharge column. A shaft from the head to the pump bowl drives the impeller. The bowl is placed beneath the water surface. It has a screen to keep coarse sand and gravel from entering the pump. The turbine pump has stationary guide vanes surrounding the impeller. As the water leaves the rotor, the gradually enlarging vanes guide the water to the casing and the kinetic energy is converted to pressure. The vanes provide a more uniform distribution of the pressure.

In the deep-well turbine pump, the maximum impeller diameter is determined by the diameter of the bowl which is, in turn, restricted by the well diameter. Since well diameters usually are relatively small, the head developed by a single impeller known as a single-stage pump is not great. It is usually necessary to use more than one stage to create the required pumping head with one-stage impeller discharging directly into another. The head produced by such a pump is directly

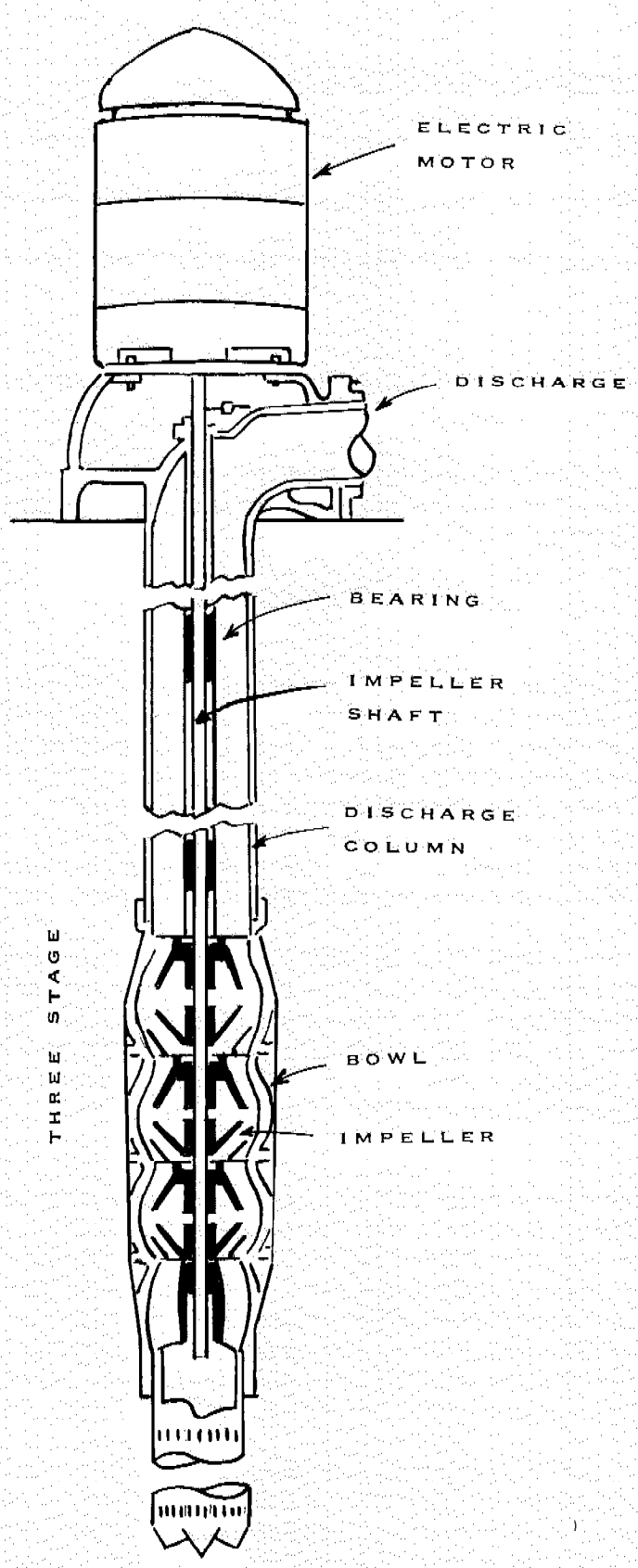

Figure 8-11.--Deep-well turbine pump.

proportional to the number of stages; that is, for given capacity, a two-stage pump will produce twice the head of a single-stage pump, etc.

The type of impeller affects capacity. The capacity is determined by the area through which flow occurs and by the velocity of flows through this area. The velocity is determined by the peripheral speed of the impeller so that the quantity is then determined by the width of the impeller. Of two impellers of the same diameter, the one having greater width will have a greater capacity. The impeller may be designed so that the discharge does not increase so rapidly with reduction in lift and thus an increase in the brake horsepower required at low lift may be avoided. This is an advantage to prevent overloading with changing conditions.

Impellers also may be designed with a higher efficiency over a narrow range of discharges with a rapid decrease in efficiencies under both larger and smaller heads. In wells where fluctuations in lift frequently occur, impellers with flat-topped efficiency curves usually will give higher average efficiencies for all-season operations.

Seasonal fluctuations in the water table should be determined prior to installing the pump so that the bowls of the turbine pump can be placed below the farthest drawdown point. Although a pump is capable of drawing the water below the bowls by drawing on the suction, it is better to have the suction lift in reserve against a lowering of the water table. In locations where fluctuations are apt to occur and it is important to maintain a constant discharge over the anticipated pumping range, a power unit with variable speeds must be used.

In areas of fluctuating water table, it is a good policy to install a water-level measuring device with the pump. This will enable the operator to keep informed of ground-water conditions and to anticipate system alterations and pump replacements.

Characteristic Curves.

Characteristic curves of the deep-well turbine pump are determined by test and depend largely on the bowl design and by the speed of the impeller shaft. Head capacity, efficiency, horsepower, and rate of speed are similar to those given for centrifugal pumps. Efficiency curves, in particular, are very similar if the pumps are operated at their designed speed. Turbines, however, cannot operate at a high efficiency over as wide a range of speed as can centrifugal pumps. The reason for this is that a high efficiency is possible only if the vanes in the bowl are in line with the flow of water as it leaves the tip of the impeller. When the speed of the impeller changes, the direction of flow of water leaving the impeller also changes. This causes turbulence against the vane and results in reduced efficiency.

Figure 8-12 shows a typical characteristic curve for a deep-well turbine pump. It is important that the characteristic curves be studied carefully in selecting a pump for any operating condition. If the pump is too large, it will operate too far to the left of its curve; its

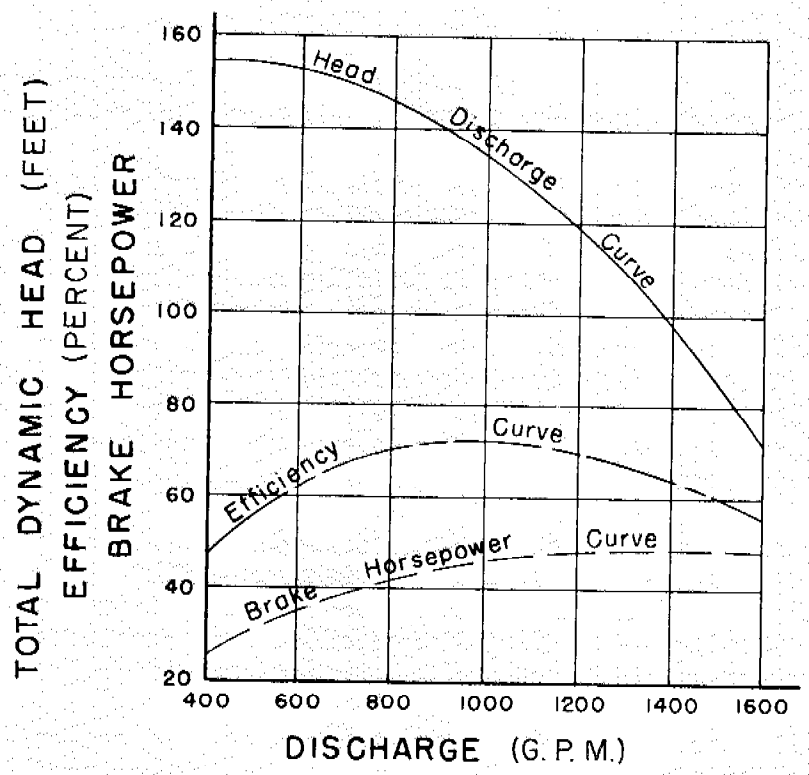

A

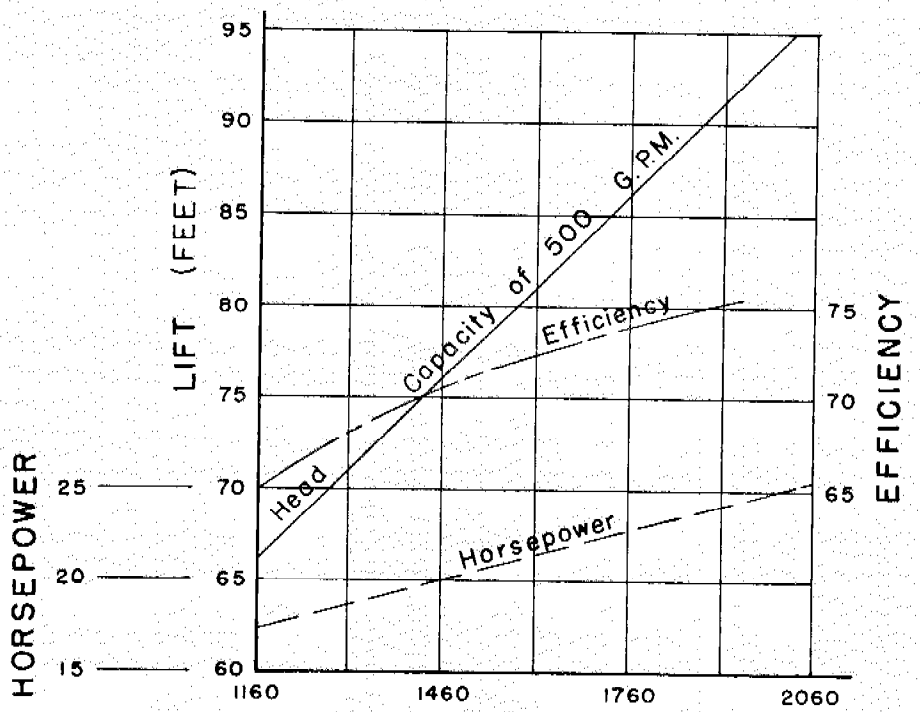

B

Figure 8-12.--A, Typical characteristic curves for deep-well turbine pump operating at constant speed. B, Heads at which a typical 10-inch turbine pump will deliver 500 g. p. m. together with related factors of pump.

efficiency will be low; and possibly a small increase in head will cause a large decrease in capacity. When the pump is too small, it will operate too far to the right of its curve. Again, this provides poor efficiency. The head developed per stage will be low requiring additional stages that would not have been necessary if a better selection had been made. Figure 8-13 shows the effect of change in operating conditions on pump efficiency.

Pump Selection.

The deep-well turbine pump, as constructed today, is fairly well standardized both as to materials used and general assemblage. Probably the greatest difference between the manufactured units is the design of the bowl and impeller and in the method of lubrication. Some companies offer oil-lubricated pumps; others water-lubricated; and some offer both. Both types have been operating successfully. Wells producing fine sands should be equipped with an oil-lubricated pump. Water for domestic use must be free of oil, and since oil-lubricated pumps waste some oil into the water, it is important that water-lubricated pumps be used.

Each reputable manufacturer has developed a series of pump bowls that have definite characteristics. They have tried to develop a series of bowls that may be used singly or more commonly in a series to meet any combination of head and discharge with a reasonably high efficiency. Possibly the biggest difference between manufacturers is in the efficiency guaranteed over the range of pumping heads and discharges specified. Quite often one manufacturer may be able to meet a range of discharge and lift with a set of bowls at the peak of their performance curve, while another manufacturer may have to utilize a set of bowls that is operating to one side or the other of their best performance to meet the conditions specified.

The selection of the proper sizes of pump column and shaft, type and number of bowls, spacing of bearings and spiders, etc., and the matching of the various units of the pump to meet all well conditions have defied all attempts at simplification and standardization. Most companies offering deep-well turbine pumps have built up their own data from which the various parts of the turbine pump are selected and matched to meet a specific condition. These data are both voluminous and fairly complicated. To specify limiting sizes of pump column and shafting, material used, etc., may result in a pump installation that is more costly, and in some cases less efficient, than could be obtained if the matching of the pump assemblage were left to the bidder. If guaranteed efficiencies and complete description of the unit are specified, it is felt that sufficient data will be obtained to make proper comparisons.

Data for Selecting Pump.

Before any pump selection can be made, it is necessary to have available accurate well data. While a pump can be selected for any head and capacity, an unsatisfactory installation is certain to result unless this pump matches the characteristics of the well. Every well should therefore be tested before a pump is purchased for permanent

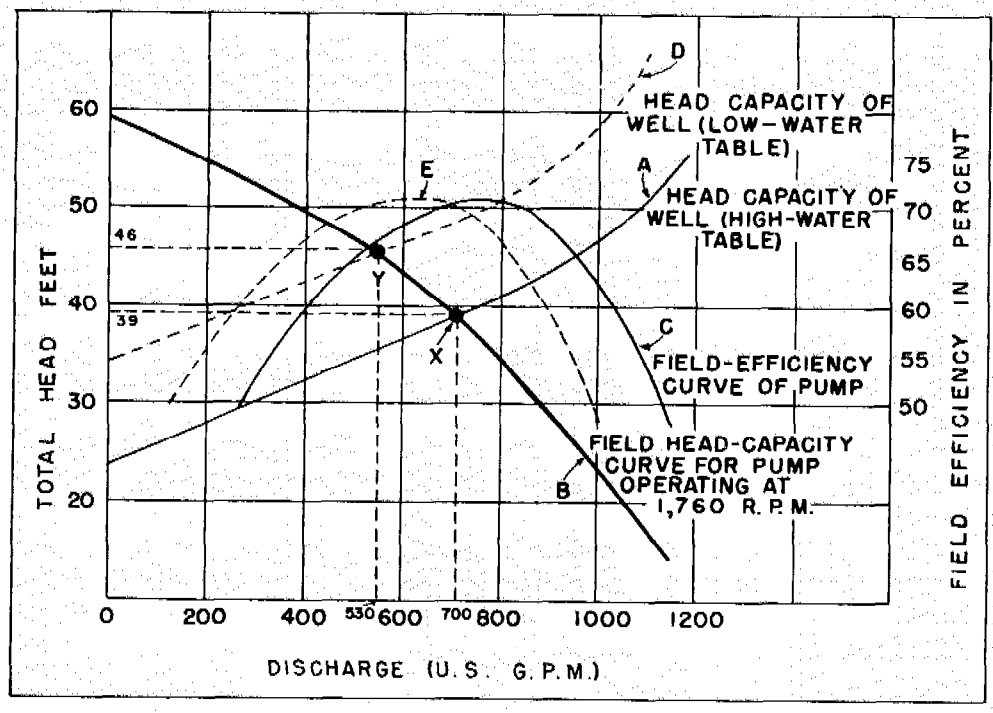

At A is shown the head-capacity curve for a well with the high-water-table conditions that often exist in the spring, at the beginning of the pumping season.

The field head capacity for the pump is shown at B. Under these conditions the two curves cross at X, which indicates that this particular pump would deliver 700 gallons per minute with a lift of 39 feet.

A pump is chosen with the highest efficiency, about 71 percent at this point as shown by efficiency curve C. Later in the season the water table may drop 10 feet, and the new head-capacity curve may appear as shown by the dotted line D. This crosses line B at Y which now indicates that only 530 gallons of water will be pumped per minute and that the new head will be 46 feet instead of 39.

The operating point has moved down the efficiency curve, and now the new efficiency is approximately 65 percent instead of 71 percent.

In choosing a pump, it is well to obtain accurate data on the fluctuations of the water table. In this case a pump with an efficiency curve as shown by dotted line E would have served both conditions with high efficiency at all times.

A pump design which produces a flat-topped efficiency curve is advantageous under the conditions shown in the accompanying diagram.

Figure 8-13.--Effect of change in operating conditions on pump efficiency.

installation. These tests should be made with the greatest accuracy, since faulty capacity or head measurements are as bad as no measurement at all. The following information is usually desired by pump manufacturers so that they can determine the type and size of pump needed to fit the characteristics of the well:

Depth of well . . . . . _____ feet
Inside diameter of well casing . . . . . _____ inches
Depth to static water level . . . . . _____ feet
Furnish drawdown-yield relationship curve _____
Seasonal fluctuation in water table . . . _____ feet
Capacity of pump . . . . . _____ gpm
Depth to end of suction pipe . . . . . _____ feet
Is strainer required? . . . . . _____

Type of driver: Electric: voltage_____ phase_____ cycle_____
Gasoline _____ Diesel_____
Natural or LP gas_____ power takeoff_____

Installation.
Most of the installation features discussed under centrifugal pumps also apply to turbine pumps. Deep-well turbine pumps must be in correct alinement between the pump and the power unit, and the pump should be alined in the well casing so that no part of the pump assembly touches the well casing. This is important because vibration in the pump assembly will wear holes in the well casing whenever the two come into contact.

The pump must be mounted on a good foundation so that its alinement between pump and drive and pump and well casing will be maintained at all times. A foundation of concrete provides the most permanent and trouble-free installation. The foundation must be large enough so that the pump and drive assembly can be securely fastened. The foundation should have at least 12 inches of bearing surface on all sides of the well. In the case of a gravel-packed well, this 12-inch clearance should be measured from the outside edge of the gravel packing. When the pump is installed in a gravel-packed well, at least two openings should be provided in the foundation on opposite sides of the well to permit refilling with gravel as the gravel-pack settles (fig. 8-14).

Submersible Pumps

General.
The submersible pump is simply a turbine pump close-coupled to a submersible electric motor attached to the lower side of the turbine. Both pump and motor are suspended in the water, thereby eliminating the long-line shaft and bearing retainers that are normally required for a conventional deep-well turbine pump. Operating characteristics are the same as described for deep-well turbine pumps.

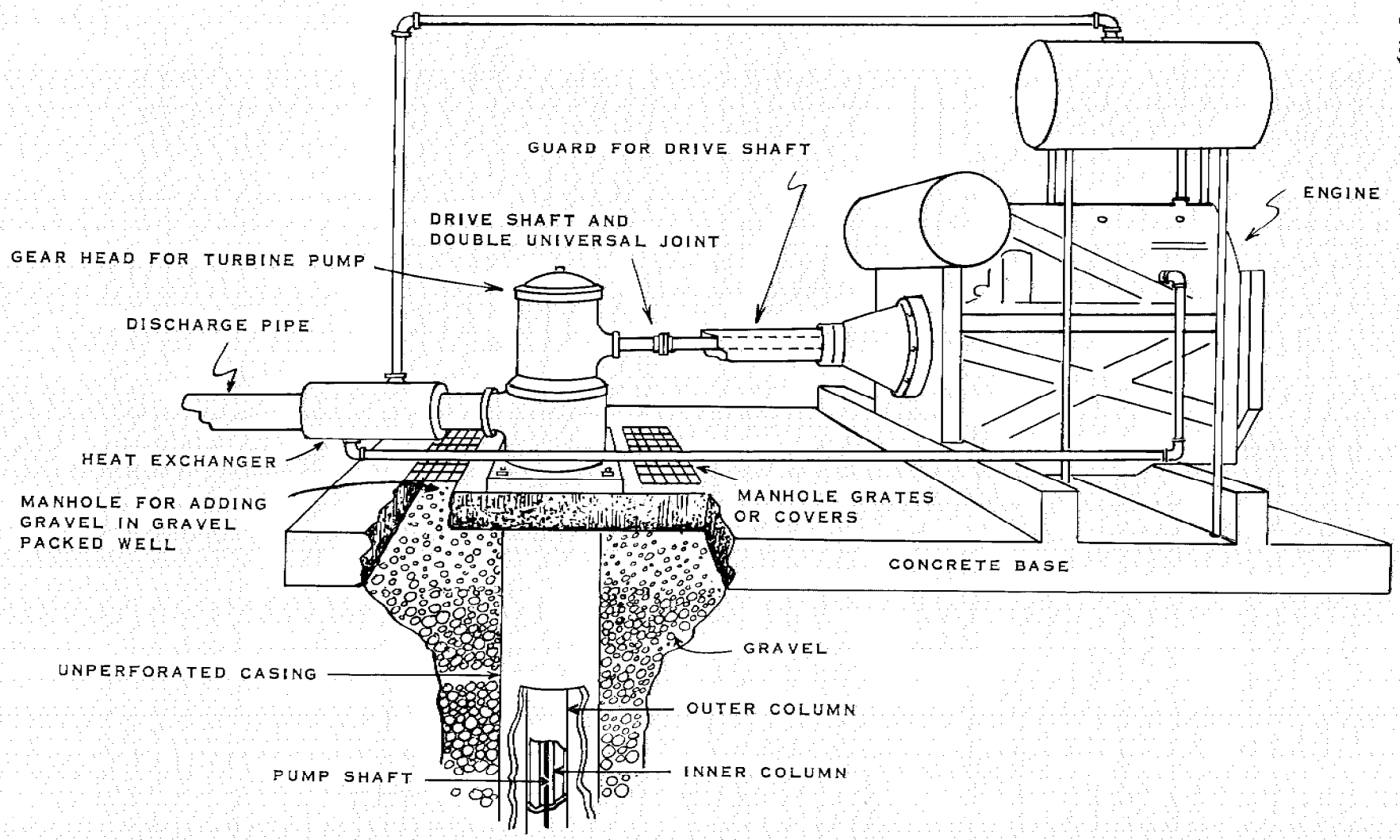

Figure 8-14.--Deep-well turbine pump installation.

Submersible pumps are adapted to cased wells of 4 inches in diameter or larger and settings generally in excess of 50 feet. The short-line shaft makes it particularly adaptable to deep settings and crooked wells. As the submersible pump has no above-ground working parts, it can be used where flooding may be a hazard by sealing the well and placing the starting box, meter, and transformer on a pole above high water. It is also adaptable to locations where above-ground pump facilities would be unsightly or hazardous.

Operation.

The submersible pump consists of a pump and motor assembly, a head assembly, discharge column, and a submarine cable to furnish power to the motor (fig. 8-15).

The pump, being a centrifugal-type turbine, is equipped with either closed impellers or open impellers or some modification of these two types arranged in series. The closed-impeller type is generally used where it is necessary for the pump to develop high pressures. Water enters the pump through a screen located between the motor and pump.

The submersible motors are made smaller in diameter and much longer than ordinary motors so that they may be inserted in wells of the usual diameters. These motors are made in various ways but are generally referred to as dry motors and wet motors. Dry motors are those that are hermetically sealed to exclude the water in the well. These motors run in a high dielectric oil under pressure, which fills the cavity inside the motor, submerging the windings, bearings, and rotor. Various provisions are made to prevent the entrance of water into the motor. External cooling of the oil is accomplished by the flow of water around the motor.

Wet motors are those in which the well water has access to the inside of the motor with the rotor and bearings actually operating in the water. In this type of motor, the windings of the starter are usually completely sealed off from the rotor by means of a thin, stainless steel inner liner. A filter around the shaft is required to prevent the entrance of abrasive material into the motor. This type of motor must be filled with water during installation so that the bearings will have sufficient lubrication when the motor is first started.

Installation.

The discharge pipe connects the pump to the head assembly. This pipe must be long enough to provide complete submergence of both the pump and the motor at all times. Initial cost of installing the submersible pump is low. Ease in installation is an outstanding feature as it is necessary only to add the required length of discharge pipe to lower the unit to the proper setting. The head assembly should rest on and be securely fastened to a concrete base that covers the well casing. Since the complete pump and motor assembly is in the well, no pump house is required, thus providing a saving in the installation cost. The control panel, however, which includes an entrance switch, meter, magnetic starter, and, in the case of a dry motor installation, an oil well safety control, should be enclosed in a waterproof box.

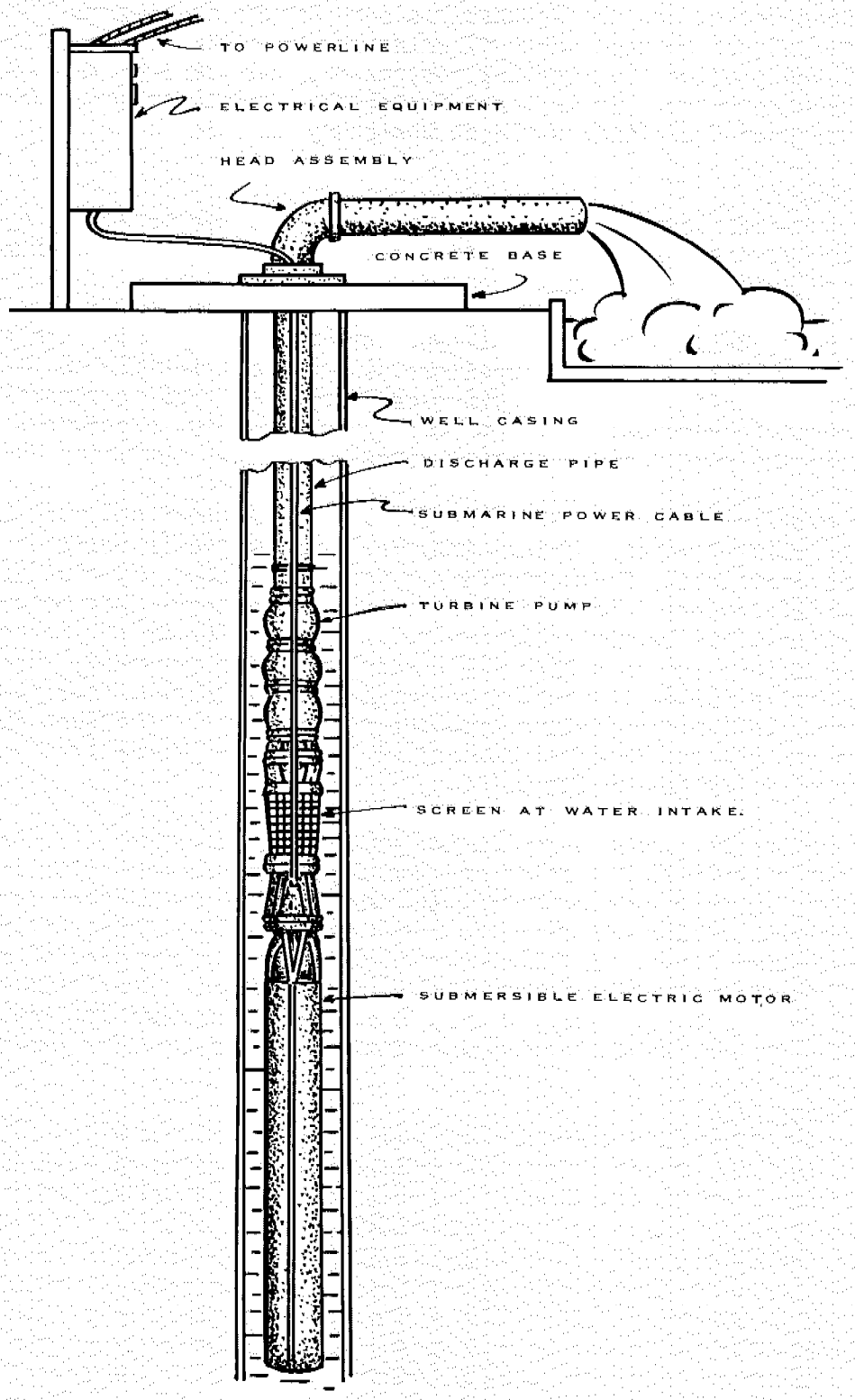

Figure 8-15.--Submersible pump.

Propeller Pumps

General.
There are two types of propeller pumps, the axial-flow or screw type, and the mixed flow. The major difference between the axial-flow and the mixed-flow propeller pump is in the type of impeller (fig. 8-16).

The principal parts of a propeller pump are similar to the deep-well turbine pump in that they have a head, an impeller, and a discharge column. A shaft extends from the head down the center of the column to drive the impeller. Some manufacturers design their pumps for multi-stage operation by adding additional impellers where requirements demand higher heads than obtainable with single-stage pumps.

Where propeller pumps are adapted, they have the advantage of low first cost and the capacity to deliver more water than the centrifugal pump for a given size impeller. Also, for a given change in pumping lift, the propeller pump will provide a more nearly constant flow than a centrifugal pump. Their disadvantage is that they are limited to pumping against low heads.

Axial Flow.
The axial-flow single-stage propeller pumps are limited to pumping against heads of around 10 feet. By adding additional stages, heads of 30 to 40 feet are obtainable. These pumps are available in sizes ranging from 8 up to 48 inches. The impeller has several blades like a boat propeller. The blades are set on the shaft at angles determined according to the head and speed. Some manufacturers have several propellers for the same size of pump, thereby providing for different capacities and heads. The water is moved up by the lift of the propeller blades and the direction of flow does not change as in a centrifugal pump. A spiral motion of the water results from the screw action but may be corrected by diffusion vanes.

Mixed Flow.
The mixed-flow propeller pump is designed especially for large capacities with moderate heads. The smaller size single-stage pump will operate efficiently at low heads of from 6 to 26 feet. The multiple stage and large size pumps will handle heads up to approximately 125 feet. They are generally built in sizes ranging from 10 to 30 inches. The mixed-flow pump uses an open vane curved blade impeller which combines the screw and centrifugal principles in building up the pressure head. They have a capacity range of from 1,000 g. p. m. to approximately 50,000 g. p. m. depending on size, stages, and heads. The mixed-flow pump operates more efficiently against higher heads than the axial-flow propeller pump.

Operating Characteristics.
Power requirements of the propeller pump increase directly as the head so adequate power must be provided to drive the pump at maximum lift. There is some tendency for a propeller pump to overload as head is increased. For this reason, it is important to select a motor which will provide ample power to drive the pump through the entire range of conditions due to change in water level or discharge pressures. Propeller

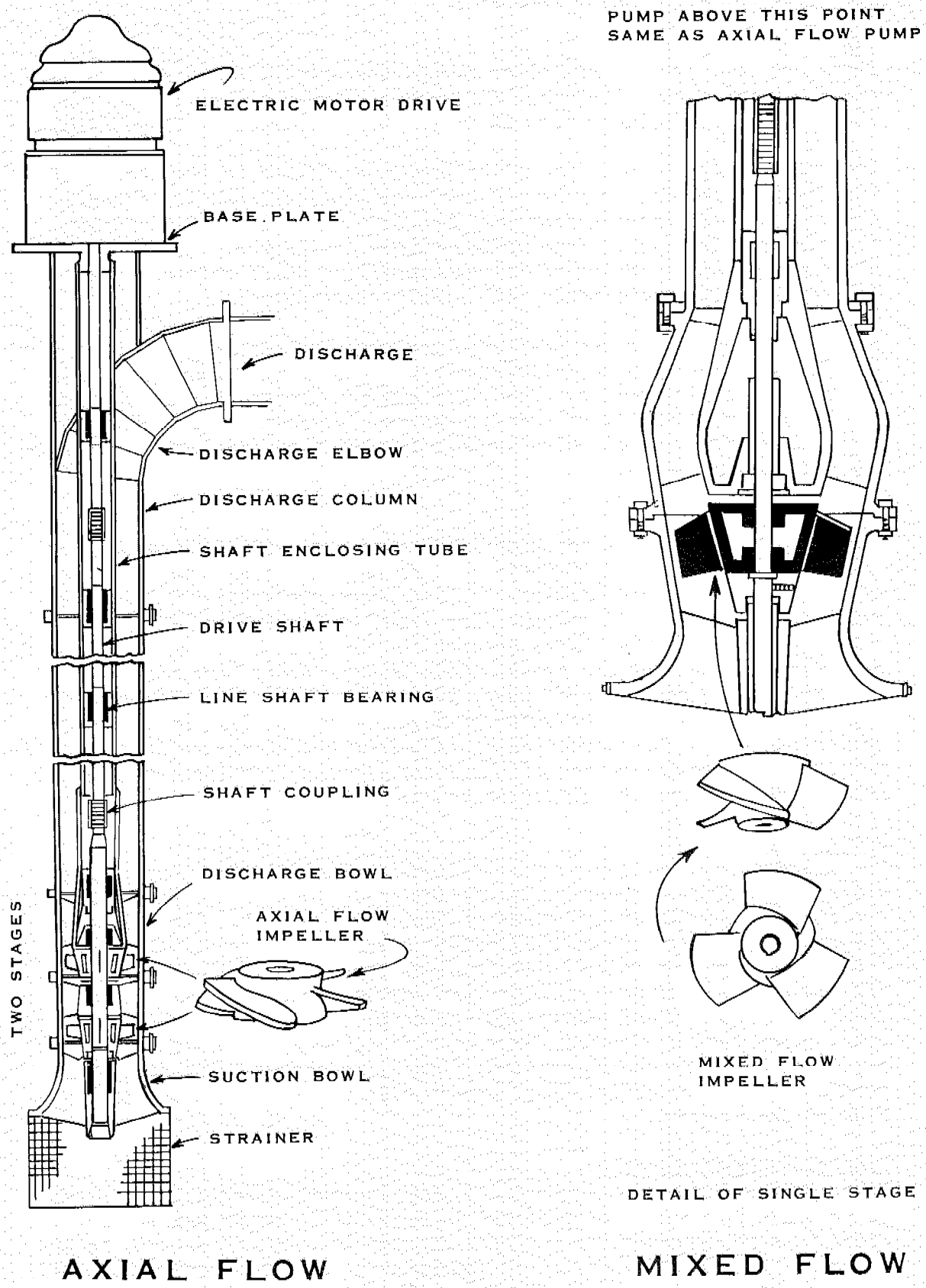

Figure 8-16.--Propeller pumps.

pumps are not suitable under conditions where it is necessary to throttle the discharge to secure reduced delivery. It is important to accurately determine the maximum total head against which this type of pump will operate.

Propeller pumps are not suitable for suction lift. The impeller bowl must be submerged with the pump operating at the proper submergence depth. Different makes and sizes of pumps require different submergence depths. Therefore, the recommendations of the pump manufacturer should always be followed. Failure to observe required submergence depth may cause severe mechanical vibrations and rapid deterioration of propeller blades.

It is also important that proper clearances be maintained between the end of the suction pipe and the side walls and bottom of the pit or pump-intake bay. Failure to observe manufacturers' recommendations on this point can result in lowering of efficiencies. When two or more pumps are installed in one pump bay, they must be separated far enough so as not to interfere with each other. The pump manufacturers have specifications for this distance. In general, this distance should be three times the diameter of the bell at the suction end of the pump measured between bells.

Some manufacturers recommend that each pump have its own sump. This can be obtained by constructing a baffle wall between adjoining pumps reaching from the sump floor to the water level in the sump. When each pump has its own sump, the distance between pumps is controlled by the required clearance between end of bell and side wall of the sump. See figure 8-17 for measurement of clearances and an example of some required clearances specified by one manufacturer.

Characteristic Curves.

Characteristic curves for propeller pumps are quite similar to those for turbine pumps and show head capacity, efficiency, and horsepower for a given pump size, type of impeller, and discharge (figure 8-18).

Propeller pumps are made by most of the nationally known pump manufacturers and by many small local machine shops. The large pump companies have rating curves developed by actual tests. These rating curves take into account all losses in the pump.

The locally manufactured pump generally lacks the hydraulic-design requirements incorporated in the nationally known pumps. The result is that they are generally cheaper to buy but have higher operating costs, particularly for higher heads. Very few of the small local companies have made sufficient tests to develop adequate rating curves. Generally, for static lifts up to about 4 or 5 feet, losses in the pump are not so important and these locally manufactured pumps may be fairly efficient.

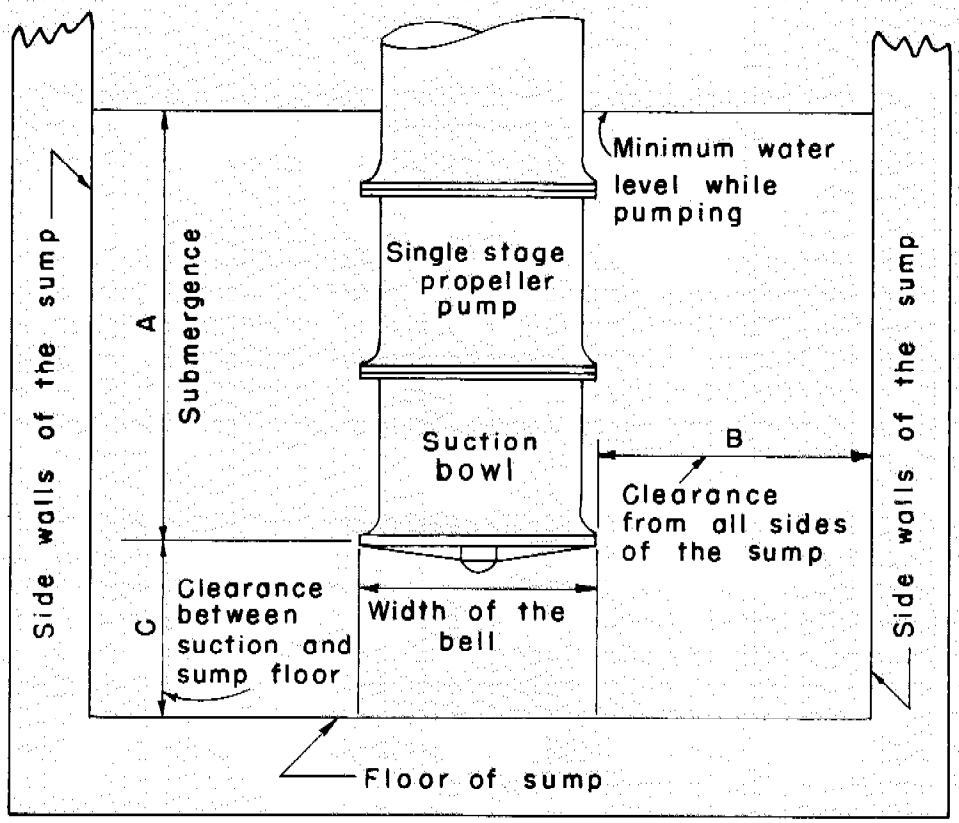

Table showing manufacturer's recommendations of clearances for propeller pump:			
Pump size	A Amount of submergence	B Clearance between pump and side walls	C Clearance between suction end and sump floor (without strainer)
8	2'-2"	12"	7"
10	2'-6"	15"	8"
12	2'-9"	18"	10"
14	3'-0"	21"	12"
Where two pumps are used, the clearance between bells should be 41", 50" and 66" respectively for 8, 10, 12 and 14 inch pumps.			

Figure 8-17.--Clearance required for propeller pump.

Curves shown are obtained by testing pumps with 10 foot column including enclosed discharge elbow with head measurements taken in a horizontal discharge pipe at least three pipe diameters beyond elbow flange.

Discharge column losses should be added when settings are deeper than 10 feet.

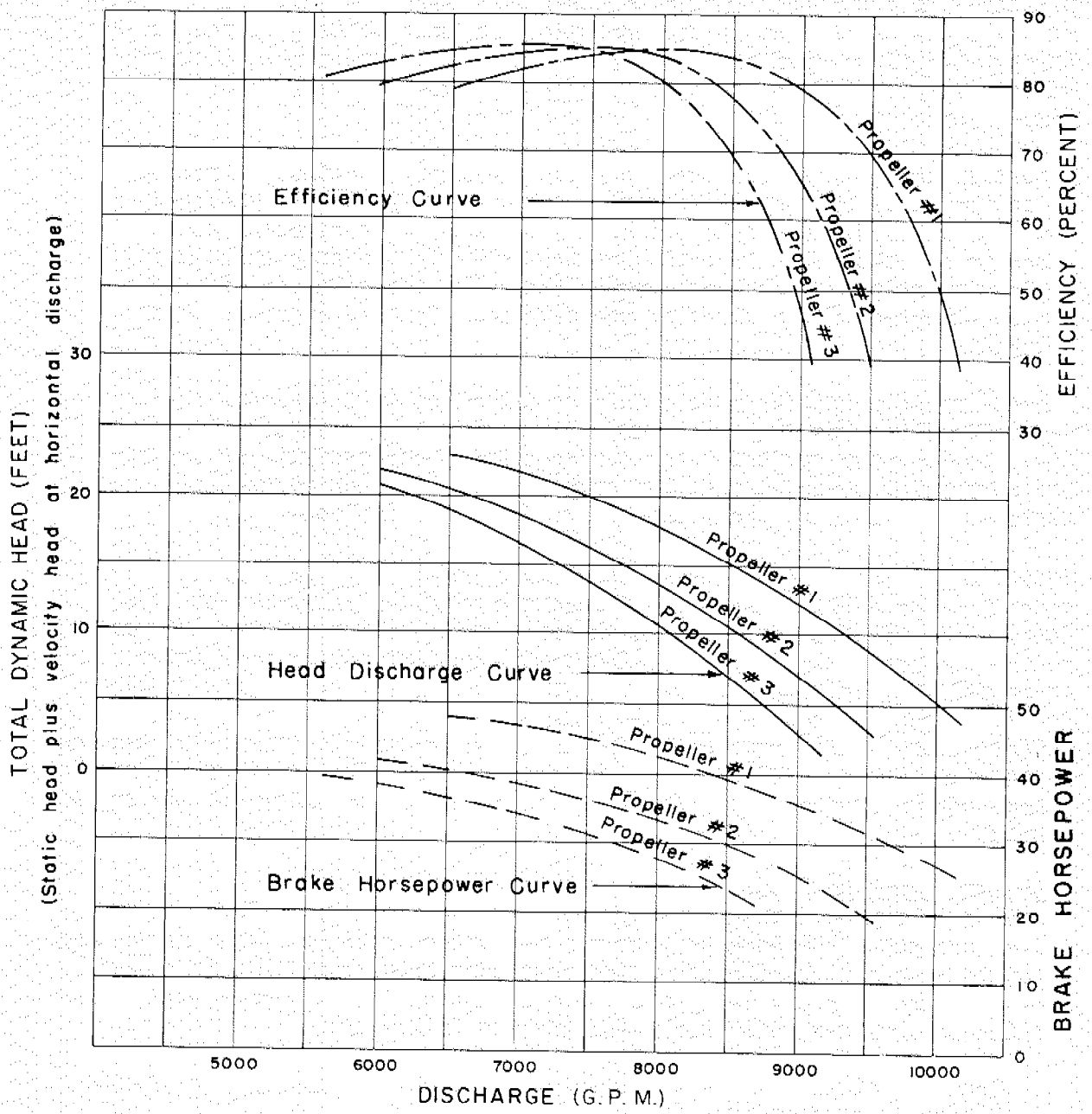

Figure 8-18.--Typical characteristic curves for an 18-inch axial-flow single-stage propeller pump with three different type propellers.

Installation.
The vertical propeller pump should be set on a firm, adequate foundation and securely fastened so that it will withstand the pump vibrations as well as the dead load of the pump and structure. The entire weight of the complete pump unit is supported by the base or floor plates. The foundation should be designed to support this weight evenly on all sides of the base plate and allow the unit to hang perpendicular through the floor opening provided for it. It is important to obtain uniform support for the base plate so as to avoid deflection of the pump column.

Generally the pump is fastened to a floor supported either on piling or on the sides of the intake bay or sump. If a partially enclosed pump bay is used, it should preferably be square. A circular shape tends to accentuate the rotation of the water in the sump which may seriously interfere with pump operations. The installation of baffle plates attached to the sides of the sump will help to overcome this trouble.

The 45° angle propeller pump should be installed with the same care as outlined for the vertical pump. Since this pump must set at an angle to the pump bay and water surface, it is necessary to so arrange the supporting beams so that the pump's base plate can be securely fastened in line with the manufacturer's recommendations.

Some type of strainer or screen should be installed to exclude floating wood or other debris that would damage the impeller if drawn into the pump. Some manufacturers provide a small strainer that can be attached to the suction bowl. These strainers work satisfactorily when water is pumped that is comparatively free of floating vegetation and small debris. When the source of water supply contains this type of foreign material, the small strainer is apt to become clogged. When this happens, it is wise to construct some type of screen around the inlet of the intake bay or sump so as to increase the area for straining out the small debris.

Data for Selecting Pump.
In general, the data needed for properly selecting a propeller pump and driver are about the same as that for the other types of pump. Reasonably accurate data must be furnished the pump manufacturer for him to select from his line of propeller pumps the one that will be the most efficient for the job. These data should include the following:

Capacity of pump . . . . . _____ g. p. m.
Discharge conditions: (show by sketch)
(a) discharge above water level
(b) discharge submerged
(c) siphon.

Static lift . . . . . _____ feet
Strainer: Yes_____ No_____
Length of discharge pipe . . . . . _____ feet
Number of bends or curves . . . . . _____
Types of power: electric - voltage ____phase _____
cycle_____ combustion engine _____
Type of driver: direct-connected vertical hollow shaft motor _____
vertical - pulley _____V-belt_____

Determining Operating Conditions

General.
A pump operates most satisfactorily under a head and at a speed approximately that for which it was designed. The operating conditions should therefore be determined as accurately as possible. A common mistake is overstating the head conditions. The correct practice is to give the head as closely as possible to the actual figure. If there is a variation in head, both maximum and minimum heads should be determined and furnished to the manufacturer for the selection of the most satisfactory pump.

Determining Head for Centrifugal Pumps.
In determining head for centrifugal pumps, it is necessary to calculate the total dynamic head (t. d. h.) considering both the suction and discharge sides of the pump. Therefore, the total dynamic head is equal to the total dynamic suction lift plus the total dynamic discharge head less suction velocity head.

Computing total dynamic suction lift. Suction lift is composed of the following factors (see fig. 8-19):

1. Static suction head (actual vertical distance of center of pump above lowest water surface after pumping begins).

2. Friction head in pipelines.

3. Head losses in elbows, strainers, foot valves, and other accessories.

4. Velocity head.

Atmospheric pressure determines the maximum practical suction lift. Atmospheric pressure not only varies with altitude and temperature, but also varies with weather conditions. As the pressure on the water at sea level is one atmosphere or 34 feet, the highest theoretical suction lift at sea level is 34 feet less friction losses. This maximum theoretical suction lift cannot be obtained under actual conditions. Pump manufacturers usually recommend that the design suction lift be limited to 70 percent of its theoretical value.

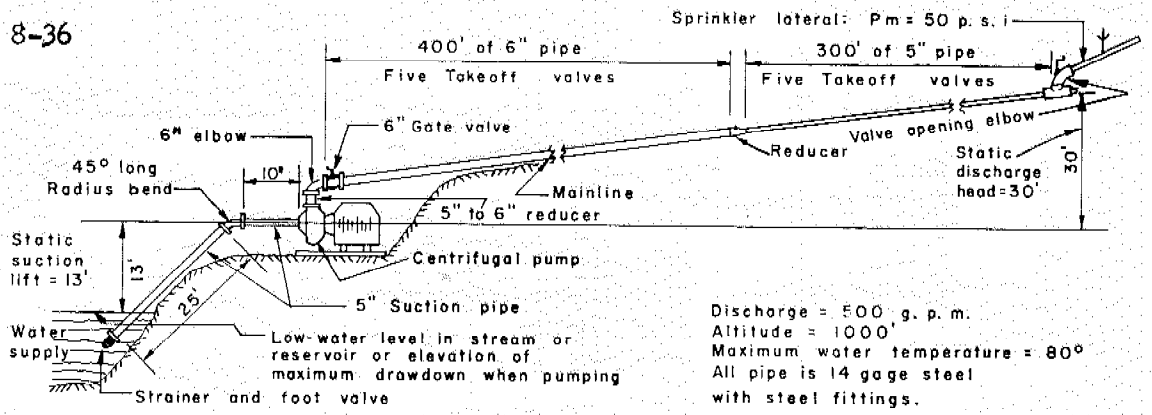

Problem: Check total dynamic suction lift and total dynamic head.

Compute total dynamic suction lift —

	Feet
1. Static suction lift	13.00
2. Friction head in pipelines: Suction pipe = (25' + 10') = 35' 35' of 5" pipe at 500 g.p.m. = 35' X 0.0593 Ft/Ft.	2.08
3. Friction head in fittings:	
5 inch 45° long radius bend ($h_f = K \times \frac{V^2}{2g}$ = 0.18 X 0.99)	.18
Foot valve ($h_f = K \times \frac{V^2}{2g}$ = 0.8 X 0.99)	.79
Strainer ($h_f = K \times \frac{V^2}{2g}$ = 0.95 X 0.99)	.94
Velocity head ($\frac{V^2}{2g}$)	.99
Total Suction Lift	17.98

Note: Reference to table 8-1, page 8-37, shows the maximum design static siphon lift at altitude of 1000 feet with water temperature of 80° F. is 22'. System as designed is within limit of practical suction lift.

Compute total dynamic discharge head

	Feet
1. Static discharge head	30.00
2. Friction head in pipelines: 400' of 6" pipe at 500 g.p.m. = 400 X .0236	9.44
300' of 5" pipe at 500 g.p.m. = 300 X .0593	17.79
3. Friction head in fittings:	
One 5 to 6" increaser ($h_f = [1 - 25/36]^2 \times \frac{V^2}{2g}$ = 0.09 x 0.99)	.89
One 6" standard 90° elbow ($h_f = K \times \frac{V^2}{2g}$ = 0.28 X 0.48)	.13
One 6" Gate valve, open ($h_f = K \times \frac{V^2}{2g}$ = 0.11 X 0.48)	.05
Five 6" takeoff valves (same as gate valve open=0.11 X .48 X 5)	.25
Four 5" takeoff valves (same as gate valve open=0.13 X .99 X 4)	.51
One take off valve and valve opening elbow, operating ($h_f = K \times \frac{V^2}{2g}$ = 12 X .99)	11.78
One 6 to 5" reducer ($h_f = 0.7[1 - 25/36]^2 \times \frac{V^2}{2g}$ = 0.7 x 0.93 X 0.99)	.64
4. Velocity head at end of discharge pipe (5" pipe at 500 g.p.m.)	.99
5. Pressure required to operate lateral (50 p.s.i. X 2.31')	115.50
Total discharge head	187.97

T.D.H. = Total dynamic suction lift + total dynamic discharge head — suction velocity head

T.D.H. = 17.98 + 187.97 − 0.99 = 204.96'

Figure 8-19.—Example of determining head for centrifugal pumps.

The computed dynamic suction lift must not be more than the maximum design static siphon lift. If a suction lift is greater than the maximum design static siphon lift, the system will not operate properly under designed conditions. In other words, the discharge will drop below the required amount to a point where friction and velocity head are sufficiently decreased. When this condition exists, the static lift should be decreased or a larger suction pipe used to decrease the friction loss.

Table 8-1 gives the maximum design static siphon lift based on altitude and water temperature:

Table 8-1.— Maximum design static siphon lift in feet

Altitude (ft.)	Temperature				
	60°F.	70°F.	80°F.	90°F.	100°F.
0	23.4	23.2	23.	22.6	22.2
500	23.	22.8	22.5	22.2	21.8
1,000	22.4	22.3	22.	21.8	21.4
1,500	22.	21.9	21.6	21.4	20.9
2,000	21.6	21.5	21.2	20.9	20.5
3,000	20.8	20.6	20.4	20.1	19.7
4,000	20	19.9	19.6	19.3	18.9
5,000	19.2	19.1	18.8	18.6	18.1
6,000	18.5	18.3	18.1	17.8	17.4
7,000	17.8	17.6	17.4	17.1	16.7
8,000	17.1	16.9	16.7	16.4	16

Computing total dynamic discharge head.--All losses on the discharge side of the pump must be accurately computed. The total dynamic discharge head is composed of the following factors (see fig. 8-19):

1. Static discharge head which is the actual vertical distance measured from the centerline of the pump to the centerline of the pipe at the discharge end, or to the surface of the water at the discharge pool, whichever is greater.

2. Friction head in the pipeline. (For sprinkler systems, the laterals are not included -- only the main and supply line.)

3. Friction head developed in the elbows, reducers, valves, and other accessories.

4. Velocity head at end of discharge pipe.

5. Pressure required at end of line. For sprinkler systems, this is the pressure required to operate the lateral. When the system is designed to discharge freely into a ditch or reservoir, no additional pressure is required.

Determining Head for Deep-Well Turbine Pumps.
The total dynamic head for deep-well turbine pumps differs somewhat from centrifugal pumps in that suction lift is not involved because the impellers of the pump are submerged. Losses in the pump and pump column are included in the pump efficiency and should not be included when figuring the total dynamic head. Therefore, the total dynamic head is composed of the following factors (fig. 8-20):

1. Static head which is the actual vertical distance in feet measured from the water level in the well when pumping the required discharge to the centerline of the pipe at the discharge end.

2. Friction head in the discharge pipeline.

3. Head losses in elbows, reducers, valves, and other accessories.

4. Velocity head at the end of the discharge pipe.

5. Pressure required at the end of the discharge pipe.

Determining Head for Propeller Pumps.
The total dynamic head for propeller pumps is similar to that for deep-well turbine pumps and is composed of the following factors (fig. 8-21):

1. Static head which is the actual vertical distance measured from the low-water level in the pump bay to, as shown in figure 8-21, (a) centerline of pipe at the discharge end when the water level is below the pipe at the discharge end; (b) to the water surface at the discharge end when the pipe is submerged; (c) to water level in discharge bay when installation is made to take advantage of siphoning.

   In the case of a siphon installation at the start of pumping, it is necessary to raise the water to the highest point in the line to fill the discharge pipe. The siphoning action will then start and as soon as this occurs, some reduction in head will take effect. No additional power will be required; however, capacity will be reduced until siphoning starts. The limit to practical siphon lift depends upon altitude above sea level, water-vapor pressure at water temperature, velocity head at high point in the siphon, and head loss in the siphon piping.

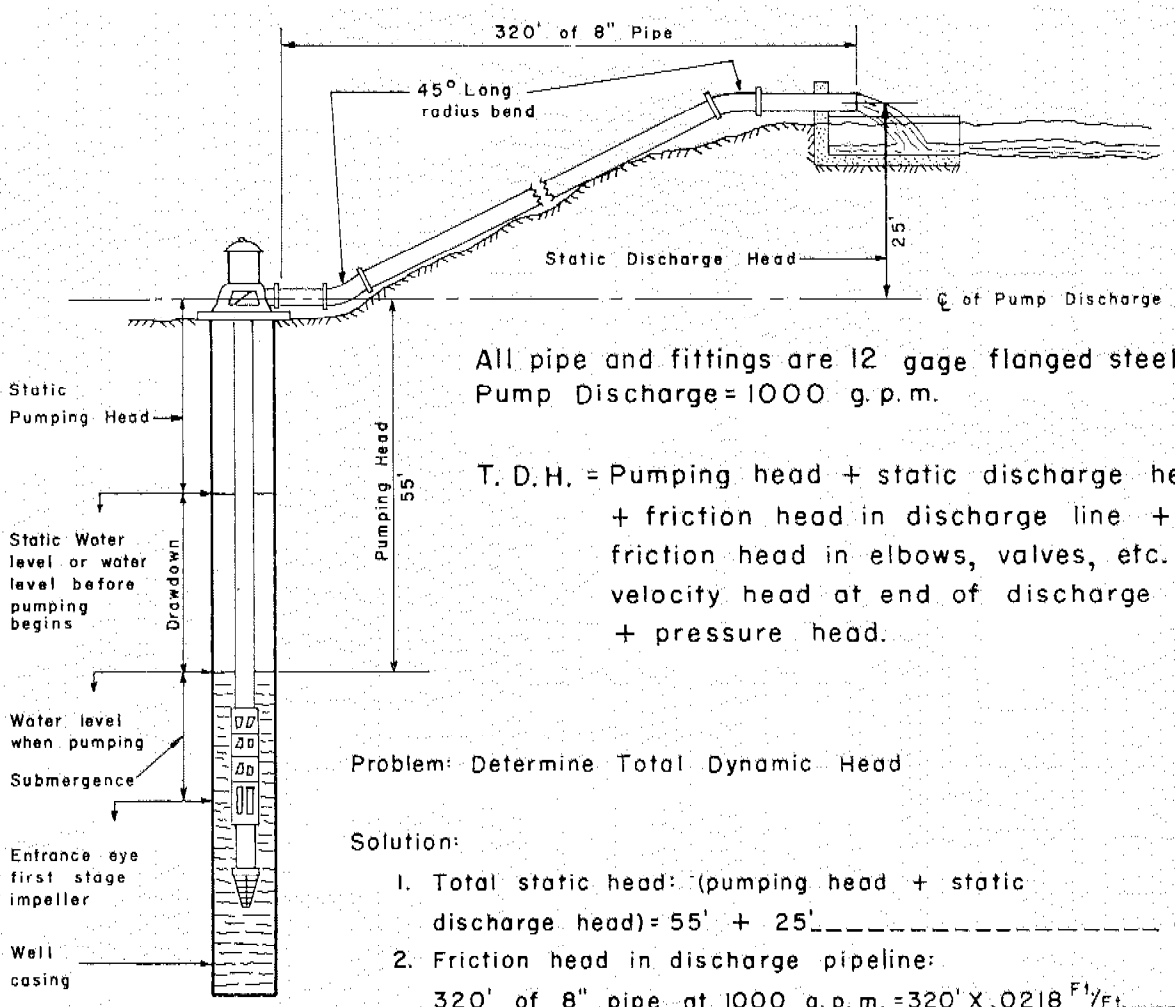

All pipe and fittings are 12 gage flanged steel
Pump Discharge = 1000 g. p. m.

T. D. H. = Pumping head + static discharge head + friction head in discharge line + friction head in elbows, valves, etc. + velocity head at end of discharge pipe + pressure head.

Problem: Determine Total Dynamic Head

Solution:

	Feet
1. Total static head: (pumping head + static discharge head) = 55' + 25'	80.00
2. Friction head in discharge pipeline: 320' of 8" pipe at 1000 g. p. m. = 320' X .0218 Ft/Ft.	6.98
3. Friction head in fittings: Two 45° long radius bends ($h_f = K \times \frac{V^2}{2g} = 0.17 \times 0.64$) X 2	.22
4. Velocity head at end of discharge pipe: $\frac{V^2}{2g} = \frac{6.41}{64.4} = 0.64$	.64
5. Pressure head	.00
Total dynamic head	87.84

Figure 8-20.--Example of determining head for turbine pumps.

(a.) WATER LEVEL BELOW PIPE AT DISCHARGE END

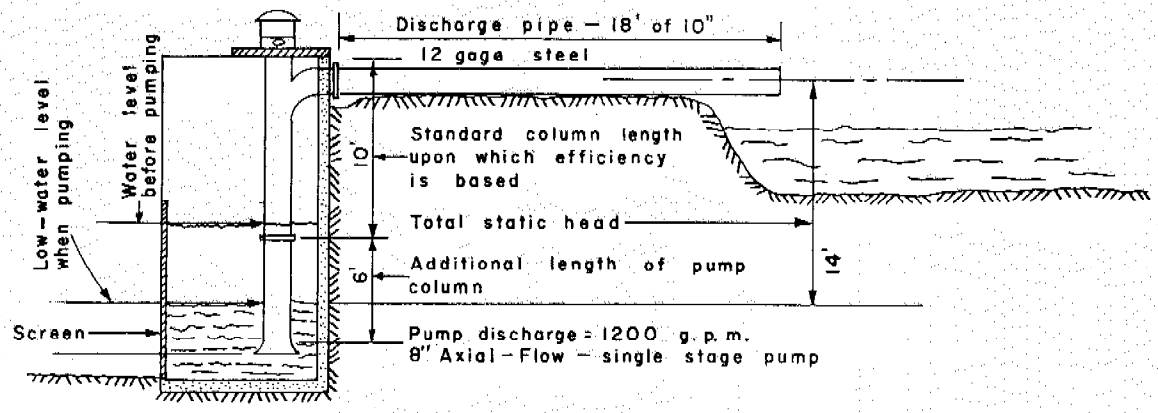

(b.) WATER LEVEL ABOVE PIPE AT DISCHARGE END

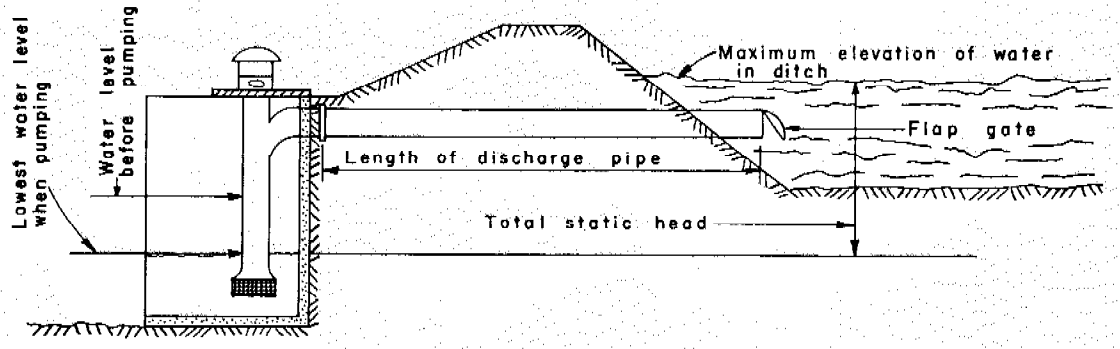

(c.) DISCHARGE END OF PIPE SUBMERGED FOR SIPHON ACTION

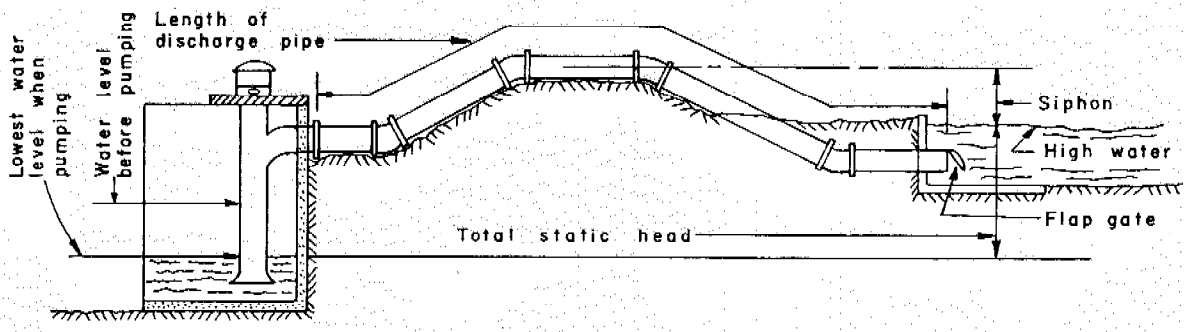

Problem: Determine total dynamic head for (a.) above for a capacity of 1200 g. p. m.

Solution:—

	Feet
1. Total static head (pumping level to ℄ discharge pipe)	14.00
2. Friction head in additional 6' of pump column: 8" pipe at 1200 g.p.m. = 6' X .0307	.18
3. Friction head in discharge line: 10" at 1200 g.p.m. = 18' X .01	.18
4. Friction head in fittings: (no strainer-screen on pump bay)	.00
5. Velocity head at end of discharge for 10" pipe $(\frac{V^2}{2g})$ =	.34
Total T. D. H.	14.70

Figure 8-21.--Example of determining head for propeller pumps.

2. Head losses in pump column pipe, pump discharge elbow and suction bowl -- these losses are generally included when the pump efficiency is determined.

   Some companies base their efficiency on a standard length of pump column. If a longer length than the standard is used, the friction loss for this additional length must be added in determining the total dynamic head.

3. Friction head in the discharge pipeline.

4. Head losses through flap valves and strainer.

5. Velocity head at the end of the discharge pipe.

The velocity head and friction losses can be reduced by enlarging the discharge pipe. Generally, a smooth iron discharge pipe should be 2 to 4 inches larger than the pump elbow. Corrugated pipe will require a correspondingly higher increase in size. The increase in size should not be made abruptly. An expanding section 3 to 4 feet long should be used to connect the pump to the discharge pipe.

Drives

General.
The efficiency of a drive mechanism may greatly affect the operating costs of a pumping installation. Four common types of drives are usually used in irrigation pumping: direct, belt, 90° gear head, and power takeoff.

Direct Drive.
The direct drive is the most efficient as there is no loss of power as with other drives. It is limited to those conditions where the speed of the driver is the same as that for the pump. For horizontal centrifugal pumps, the drive may be through a flexible coupling (fig. 8-1), or it may be close coupled (fig. 8-22).

When a flexible coupling is used, the motor may be removed for another use or for servicing without disconnecting the pump-piping arrangement. With a close-coupled pump assembly, the pump and its prime mover are always in mechanical alinement with the result that possible power losses and mechanical difficulties occasioned by misalinements are avoided.

For deep-well turbine pumps using an electric motor, the direct drive (fig. 8-22) is the cheapest and most efficient type of drive. However, since electric motors operate at a constant speed, the discharge of the pump cannot be varied; thus, extreme care must be exercised in selecting the size of the pump. Direct drives may also be used with vertically mounted internal combustion engines.

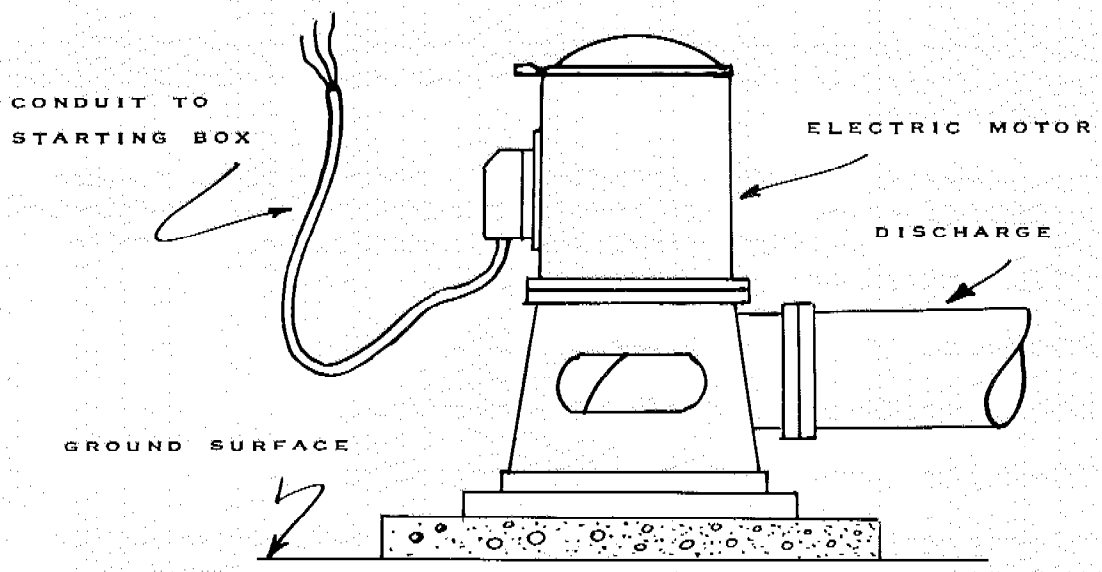

DIRECT CONNECTED TURBINE PUMP

ELECTRIC MOTOR

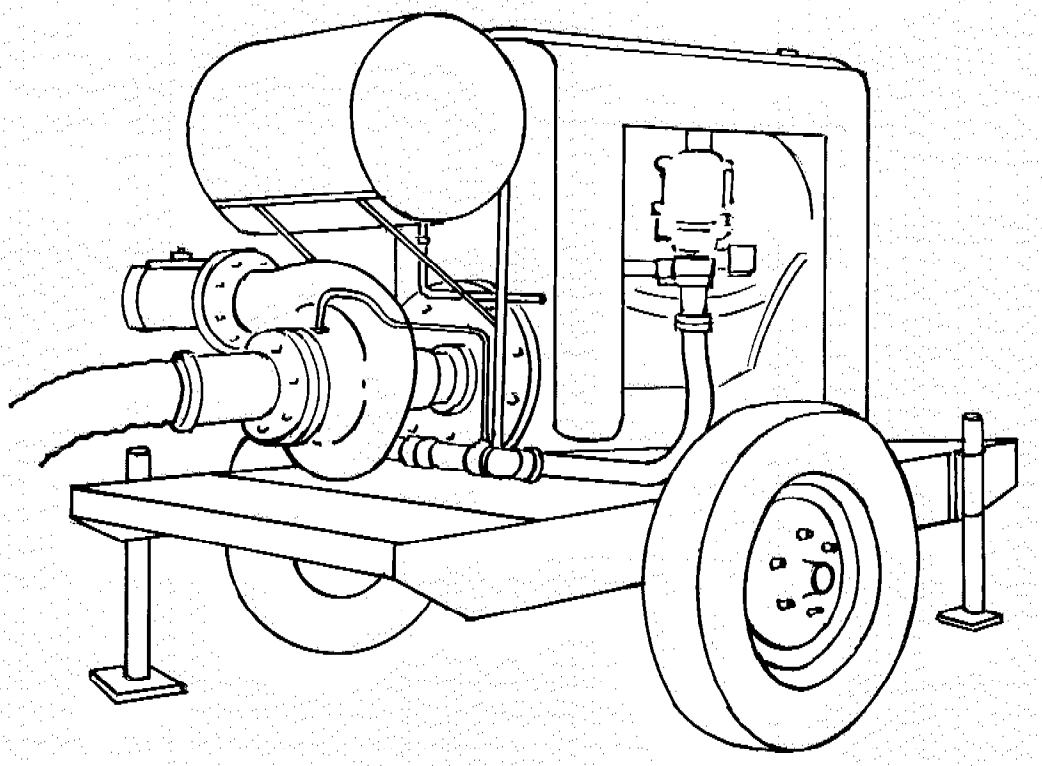

DIRECT CONNECTED CENTRIFUGAL PUMP

GASOLINE MOTOR

Figure 8-22.--Examples of direct drive.

Belt Drive.
Belt drives are either flat-belt or V-belt.

The flat-belt is the least efficient of all the types of drives (fig. 8-23). Its efficiency varies considerably, usually from 80 to 90 percent, depending upon slippage, type of pulley and belt, pulley size, number of idlers, and the twist used.

Slippage usually accounts for the most loss of efficiency. Slippage may be caused by the belt being too loose, too stiff, or too narrow. Slippage is also caused by small pulleys, pulley centers too close together pulling from the top instead of the bottom, or by placing the belt at too steep a vertical angle. Quarter turns, half turns, and idler pulleys will add to the inefficiency of flat-belt drives. The relation of pulley size to belt thickness and horsepower capacity is important. When heavy belts are turned about a small-diameter pulley, the outer fibers are greatly overstressed and the belt life is materially shortened. Power ratings are based on tensions when large pulleys are used and are reduced for small pulleys to compensate for increasing flexing. Refer to figure 8-24 for determining size and speed of pulleys.

A belt-driven installation requires considerable attention because the variation of temperature and humidity between morning and midday or day and night affects the tension on the belt and running position on the pulley. A low belt may cause edge rubbing on the mounting and damage the belt. A tight belt will cause it to slip off the pulley. The flat-belt is generally employed to make use of a source of power that is already available on the farm. Farm tractors are quite often used as a source of power using a flat-belt drive. Stationary and internal combustion motors, either gas or Diesel, and horizontal electric motors are also used.

The V-belt drive is more dependable and has a higher efficiency than flat-belt drives. When properly installed, it should have an efficiency of from 90 to 95 percent. The V-belt drive will operate successfully when pulley centers are much closer together than are permissible with flat-belts. Therefore, they can be utilized successfully in confined spaces. Special grooved pulleys are required for V-belt drives. It is important to use the proper belt and pulley size. For this reason it is best to have the V-belt manufacturer make the design for each particular installation. A large number of belts on a quarter-turn drive is undesirable because the distance between pulley center changes, and it is not possible for all belts to have the same tension. This condition is one of the reasons why very short pulley centers are not permissible on quarter-turn drives. V-belt installations cost slightly more than flat-belts; however, they are less expensive than a right-angle gear drive (figs. 8-24 and 8-25).

90° Gear Heads.
The right-angle gear drive is the most dependable and efficient method of transmitting the power of a combustion engine to a turbine

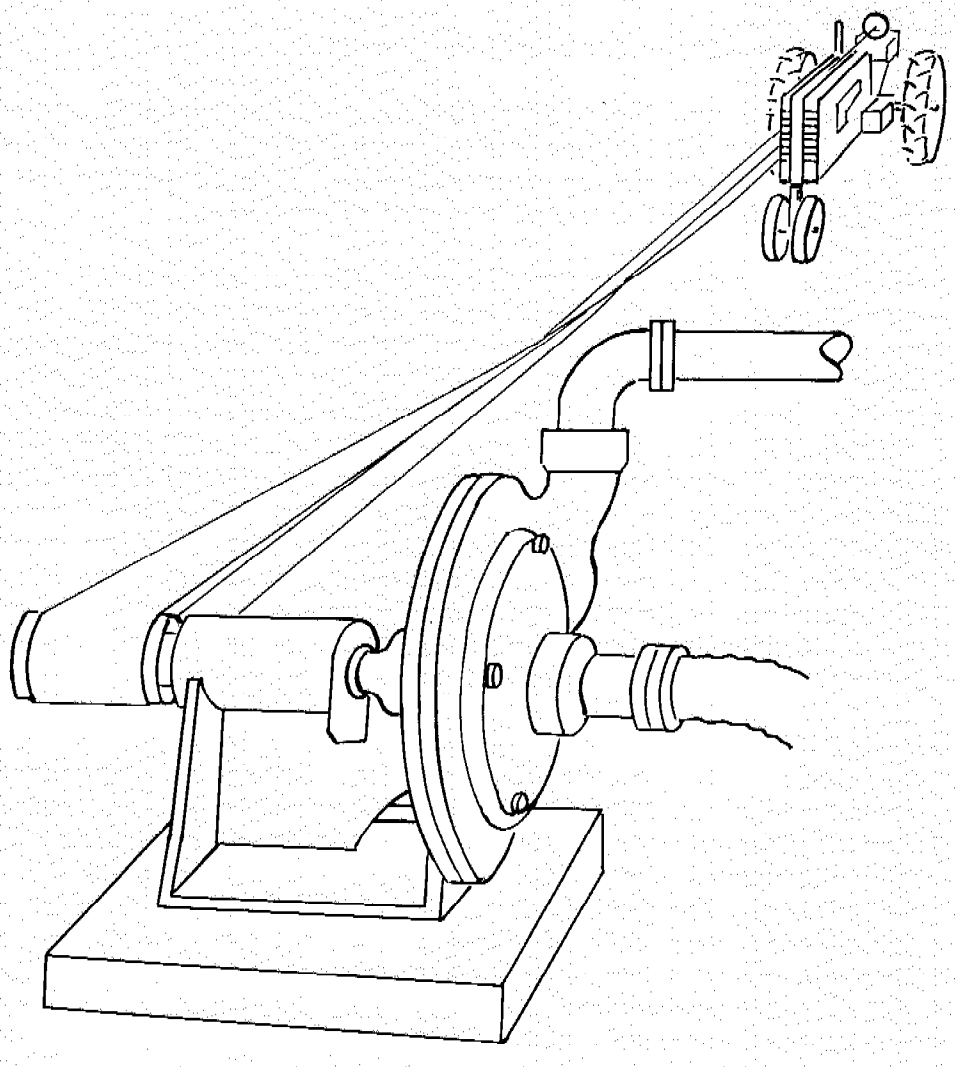

CENTRIFUGAL PUMP WITH FLAT BELT DRIVE

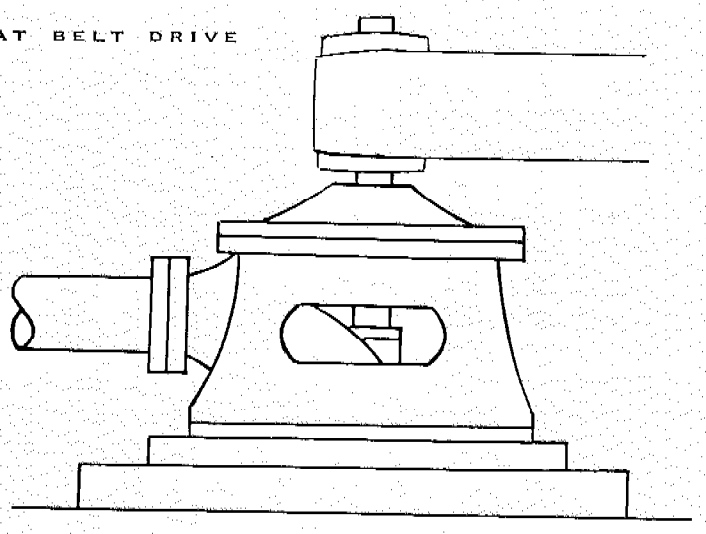

TURBINE PUMP WITH FLAT BELT HEAD

Figure 8-23.--Examples of flat-belt drive.

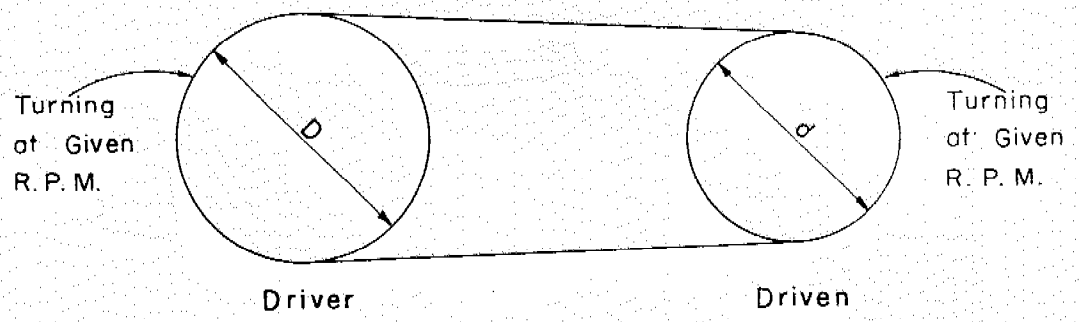

The driving pulley is called the driver and the driven pulley the driven.

If the number of teeth in gears or sprocket wheels is used instead of diameter in these calculations, number of teeth must be substituted whenever diameters occur.

1. To determine diameter of driver, the diameter of the driver and its revolutions, and also revolutions of driver being given.
   Diameter of driver (D) = $\frac{\text{diameter of driven (d) X revolutions of driven (R.P.M.)}}{\text{Revolutions of driver (R.P.M.)}}$
2. To determine diameter of driven, the revolutions of the driven and diameter and revolutions of driver being given.
   Diameter of driven (d) = $\frac{\text{diameter of driver (D) X revolutions of driver (R.P.M.)}}{\text{Revolutions of driven (R.P.M.)}}$
3. To determine the revolutions of driver, the diameter and revolutions of driven, and diameter of driver being given.
   Revolutions of driver (R.P.M.) = $\frac{\text{diameter of driven (d) X revolutions of driven (R.P.M.)}}{\text{Diameter of driver (D)}}$
4. To determine the revolutions of the driven, the diameter and revolutions of driver and diameter of driven being given.
   Revolutions of driven (R.P.M.) = $\frac{\text{diameter of driver (D) X revolutions of driver (R.P.M.)}}{\text{Diameter of driven (d)}}$

Figure 8-24.--Rules for determining size and speed of pulleys, sheaves, gears, or sprocket wheels.

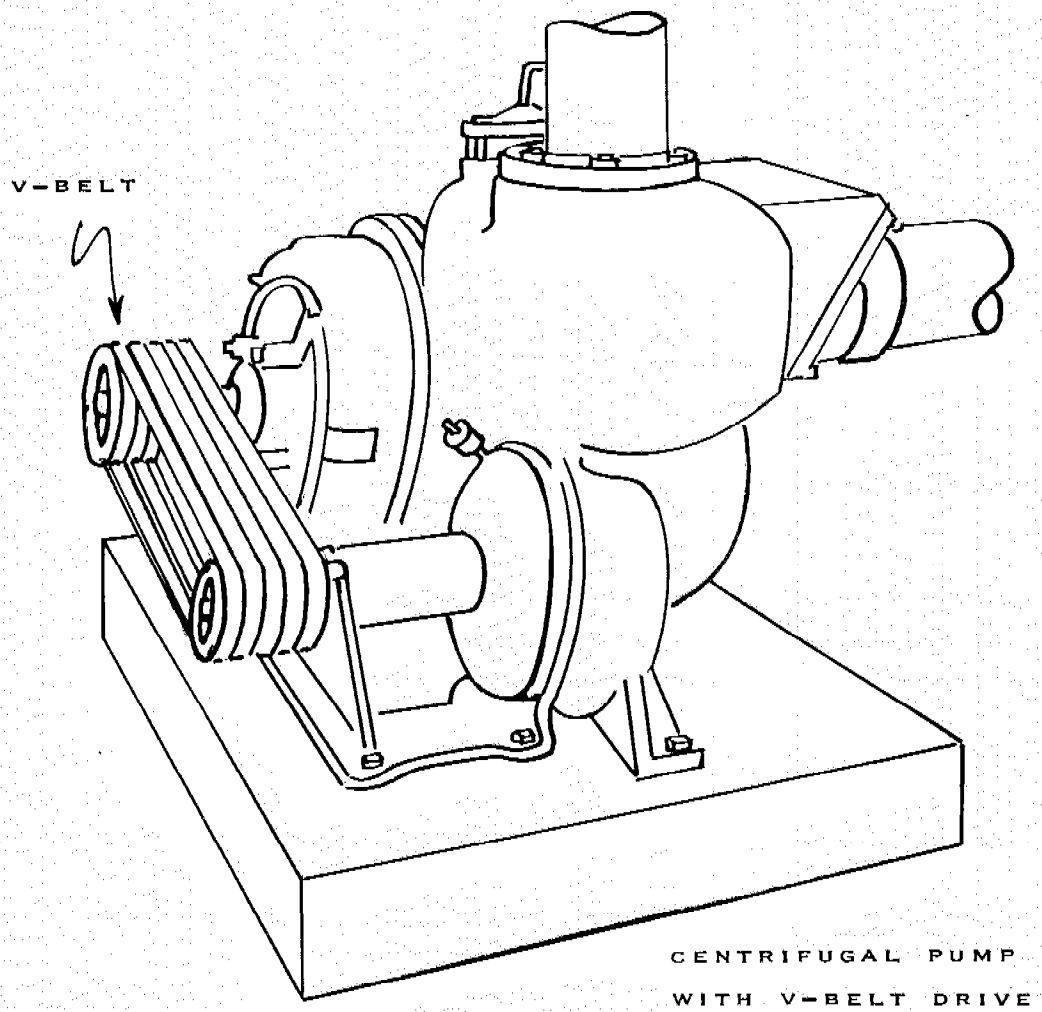

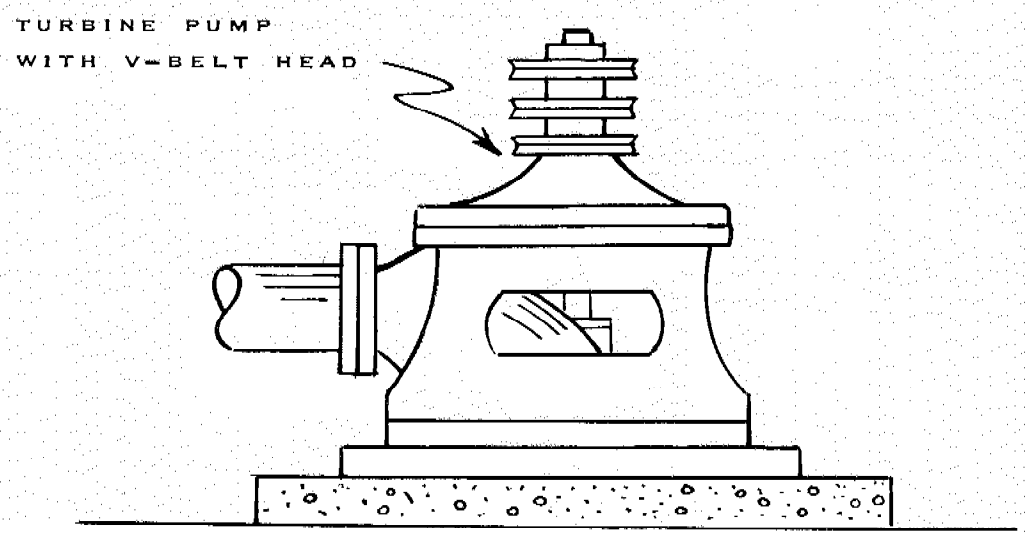

Figure 8-25.--Examples of V-belt drives.

pump. The efficiency of this type of installation is 95 percent or more. These units are made to fit any standard pump and are made with a variety of gear ratios to permit the pump and engine to operate at their most efficient speeds. The original cost of right-angle gear drives slightly exceeds the cost of the V-belt or flat-belt installation. For steady pumping and dependability, the right-angle gear drive is preferred. It not only is more efficient but also is not affected by weather and temperature conditions.

The head containing the gears replaces the ordinary pulley head, and the drive shaft may be directly connected to an engine or motor. The drive shaft should always contain a flexible or universal joint. The universal joint will take care of any errors or changes in alinement of pump and engine. The distance between the pump and engine should not be less than 3 feet because small errors or changes in alinement will not materially affect the smoothness and efficiency of power transmission (fig. 8-26).

Power Takeoff.
The use of a farm-type tractor with power takeoff is rapidly increasing as a means of power, particularly for small centrifugal pumps. The standard power-takeoff speed is 540 plus or minus 10 r. p. m. Irrigation pumps commonly operate at three to four times this speed, making it necessary to use some type of speed increaser between the tractor power-takeoff shaft and the pump-impeller shaft. The pump and speed increaser are commonly mounted either on a two-wheel trailer unit hitched to the tractor drawbar or directly on the tractor. The desired increase in speed is usually obtained through the use of spur gears, beveled gears, or V-belts. With spur gear speed increasers, the propeller shaft of the pump should be approximately parallel to the power-takeoff shaft with spur gears providing the desired increase in r. p. m. In the beveled gear type, the pump-impeller shaft is approximately at right angle to the power-takeoff shaft with beveled gears providing the change of direction and increase of r. p. m. The third type employs V-belts and sheaves alone, or in combination with gears to obtain the required pump speeds (fig. 8-27).

Reasonable care should be exercised to be sure that the power-takeoff shaft is properly alined. The universal joint-yokes on the telescoping portion of the power-takeoff shaft should be in the same plane. This is necessary to eliminate as nearly as possible the variable speeds of rotation and the resulting vibration, shock, and universal joint wear (fig. 8-28).

Cavitation

Cavitation is a term used to describe a rather complex phenomenon that may exist in a pumping installation. In a centrifugal pump this may be explained as follows:1/When a liquid flows through the suction line and enters the eye of the pump impeller, an increase in velocity takes place. This increase in velocity is, of course, accompanied by a reduction in pressure. If the pressure falls

1/ Courtesy of Fairbanks, Morse & Company, and Economy Pumps, Inc.

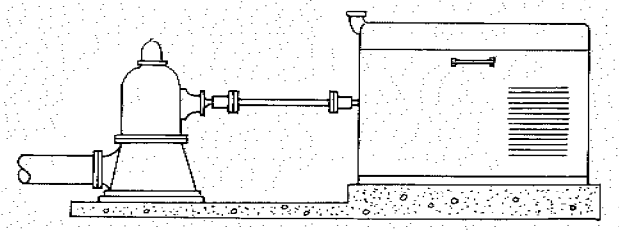

TURBINE TYPE IRRIGATION PUMP WITH GEAR HEAD CONNECTED TO A POWER UNIT WITH A SHAFT AND DOUBLE UNIVERSAL JOINT

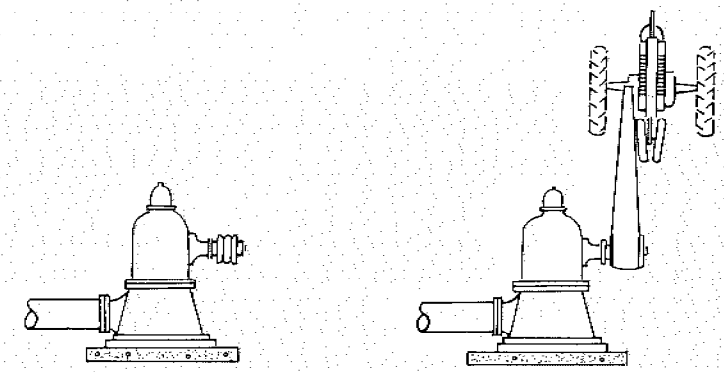

TURBINE PUMP GEAR HEAD WITH EITHER V-BELT OR FLAT-BELT DRIVE PULLEY

Figure 8-26.--Examples of right-angle gear head drives.

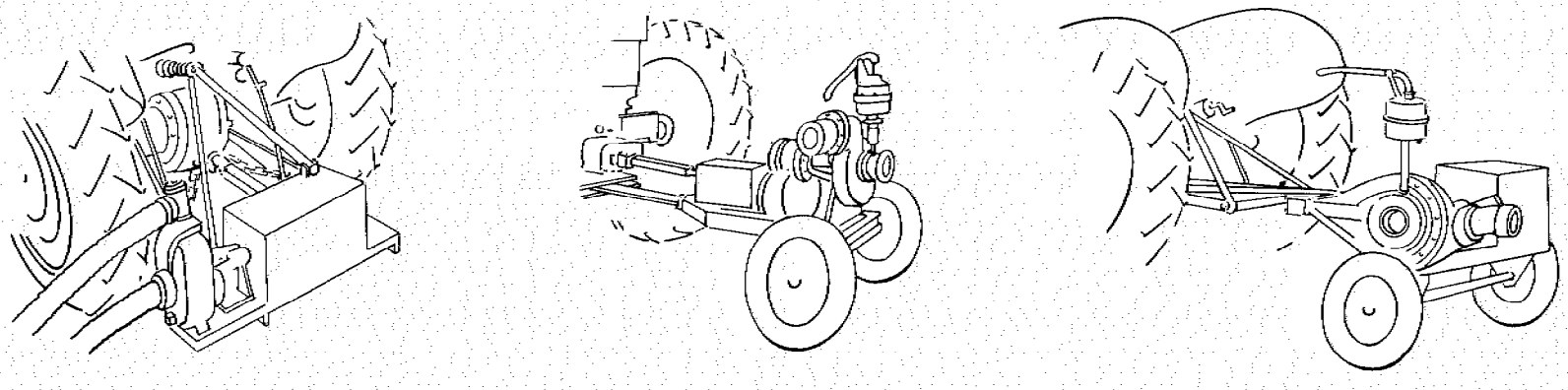

DRAWBAR MOUNTED P T O DRIVEN PUMP WITH BEVEL GEAR TYPE SPEED INCREASER

TRAILER MOUNTED P T O DRIVEN PUMP WITH SPUR GEAR TYPE SPEED INCREASER

TRAILER MOUNTED P T O DRIVEN PUMP WITH BEVEL GEAR TYPE SPEED INCREASER

Figure 8-27.--Examples of power-takeoff drives.

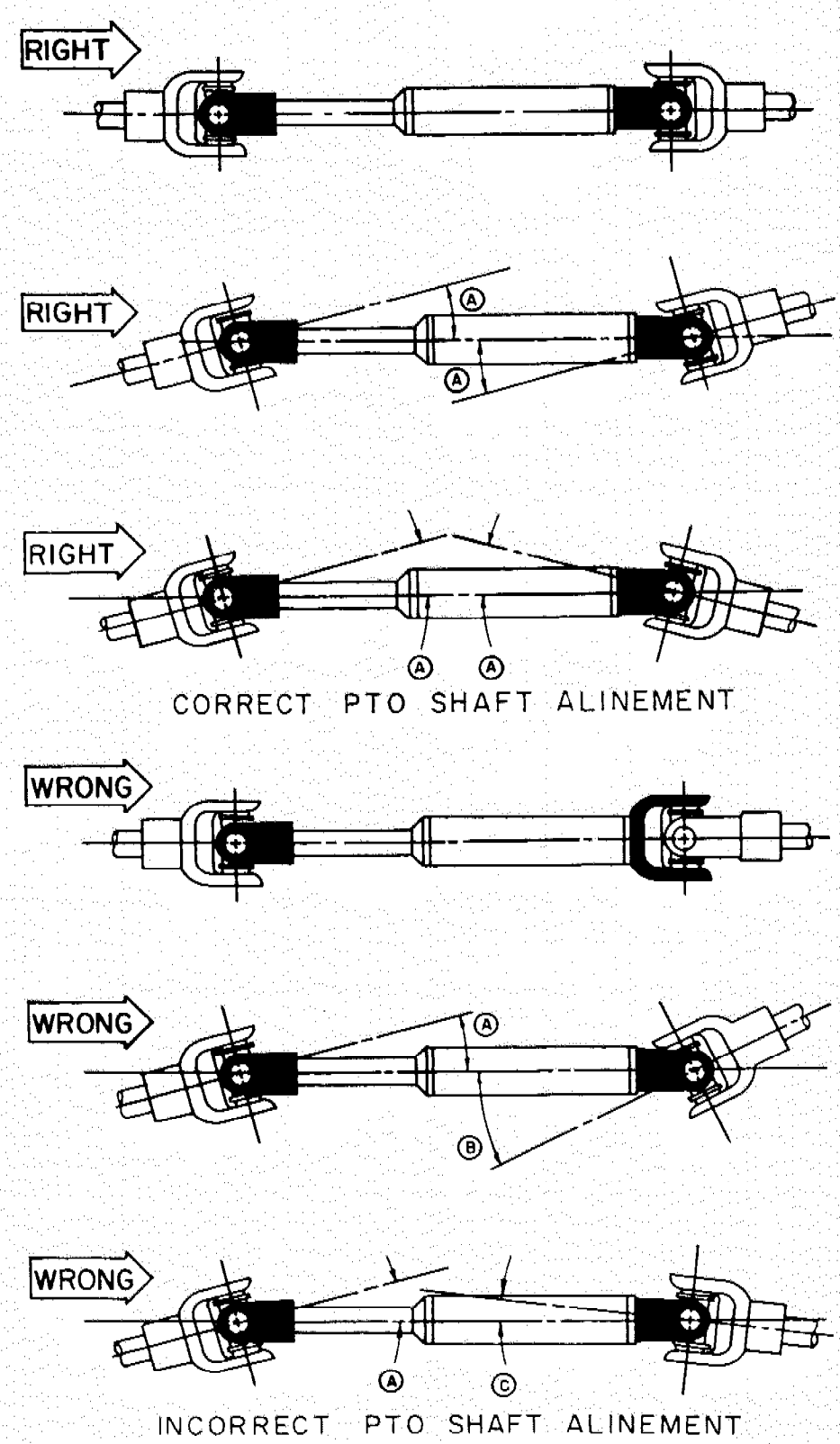

Sketches from Michigan State University — Extension Bulletin 338

Figure 8-28.--Correct and incorrect power-takeoff shaft alinement.

below the vapor pressure corresponding to the temperature of the liquid, the liquid will vaporize and the flowing stream will consist of liquid plus pockets of vapor. Flowing further through the impeller, the liquid reaches a region of higher pressure and the cavities of vapor collapse. It is this collapse of vapor pockets that causes the noise incident to cavitation.

Cavitation need not be a problem in a pump installation if the pump is properly designed and installed, and operated in accordance with the designer's recommendations. Also, cavitation is not necessarily destructive. Cavitation varies from very mild to very severe. A pump can operate rather noiselessly yet be cavitating mildly. The only effect may be a slight drop in efficiency. On the other hand, severe cavitation will be very noisy and will destroy the pump impeller and/or other parts of the pump.

Any pump can be made to cavitate, so care should be taken in selecting the pump and planning the installation. For centrifugal pumps, avoid as much as possible the following conditions:

1. Heads much lower than head at peak efficiency of pump.

2. Capacity much higher than capacity at peak efficiency of pump.

3. Suction lift higher or positive head lower than that recommended by manufacturer.

4. Liquid temperatures higher than that for which the system was originally designed.

5. Speeds higher than manufacturer's recommendation.

The explanation of cavitation in centrifugal pumps cannot be used when dealing with propeller pumps. The water entering a propeller pump in a large bell-mouth inlet will be guided to the smallest section, called throat, immediately ahead of the propeller. The velocity there should not be excessive and should provide a sufficiently large capacity to fill properly the ports between the propeller blades. As the propeller blades are widely spaced, not much guidance can be given to the stream of water. When the head is increased beyond a safe limit, the capacity is reduced to a quantity insufficient to fill up the space between the propeller vanes. The stream of water will separate from the propeller vanes, creating a small space where pressure is close to a perfect vacuum. In a fraction of a second, this small vacuum space will be smashed by the liquid hitting the smooth surface of the propeller vane with an enormous force which starts the process of surface pitting of the vane. At the same time one will hear a sound like rocks thrown around in a barrel or a mountain stream tumbling boulders.

The five rules applying to centrifugal pumps will be changed to suit propeller pumps in the following way. Avoid as much as possible:

1. Heads much higher than at peak efficiency of pump.

2. Capacity much lower than capacity at peak efficiency of pump.

3. Suction lift higher or positive head lower than that recommended by manufacturer.

4. Liquid temperatures higher than that for which the system was originally designed.

5. Speeds higher than manufacturer's recommendation.

Cavitation is not confined to pumping equipment alone. It also occurs in piping systems and is commonly known as water hammer.

Water hammer or hydraulic shock occurs when water flowing through a pipe undergoes a sudden change in velocity. The kinetic energy of the flowing liquid, under this latter condition, is converted into a dynamic pressure wave which may produce terrific impact in rebounding back and forth in the main. For this reason, check valves or surge pipes should be installed to protect the pump and prevent rupture of the pipe when the direction of the flow is reversed.

Water hammer sometimes reaches destructive magnitudes, especially in long pipes. It has been found to occur[2/]:

1. In starting or stopping a pump, or in an abrupt change in the pump's speed.

2. In the case of a power failure.

3. In the rapid closing of a valve in the piping system.

Destructive water hammer must be eliminated:

1. To reduce stress on the pipes and fixtures and thus minimize costly repairs, leaks, and delays.

2. To prevent reversal of pump, which may be dangerous to the motor or engine, or which may result in an unnecessary loss of liquid.

Booster Pumps

A saving in operating costs can sometimes be made in sprinkler irrigation by using a booster pump to provide adequate pressure for small areas that lie at elevations considerably above the principal area to be irrigated. The use of the booster pump for these small areas will permit the design of the main part of the irrigation system to carry lower pressures than that required for the small higher areas.

[2/] See footnote 1, p. 8-47.

The characteristics of the horizontal centrifugal pump are such that it can be used as a booster. When the centrifugal pump is operated with a positive pressure head applied to its suction, it will utilize this pressure. For example, if a pump capable of delivering 150-foot head and the water reaches the pump under a positive head or pressure of 70 feet, the pressure or head developed at the discharge will be (150 + 70) 220 feet. Therefore, two or more pumps of similar capacity can be operated, one discharging into the other to develop a total head which is the sum of the head developed by the individual pumps.

Power for Pumping

General.
Most irrigation pumps are powered by either electric motors or internal combustion engines. The source of power that is best suited for a specific installation depends on certain physical and environmental factors. The power-unit selection should be made only after considering the following:

1. The amount of brake horsepower required for pumping.

2. Hours of operation per season.

3. Availability and cost of energy or fuel. (In case of electricity, availability of single-phase or three-phase power may influence selection.)

4. Depreciation.

5. Portability desired in pumping setup.

6. Possibility of using the power unit for other jobs during the nonirrigating season.

7. Labor problems and need for convenience of operation.

8. Coldweather operation.

9. Original investment for power units.

It is highly important to match the engine horsepower to the requirements of the pump. Efficiency is sacrificed with both electric and internal combustion engines if the power plant is designed to deliver a great excess of power above the actual needs. Previously used power units should be carefully checked and evaluated as to condition, available horsepower, and speed. The efficiency of a unit in only fair mechanical condition may not exceed 50 percent. The use of an old, misfit power unit can be more costly from an operating standpoint than the most expensive unit fitted for the job.

Electric Motors.
An electric motor, properly selected and protected, can be expected to supply many years of trouble-free power if protections are provided including dry mountings, rodent protection, good ventilation, adequate

shelter from the elements, and safety devices against overloading, undervoltage, or excessive heating. Advantages of the electric power are relatively long life of the motor, low maintenance costs, dependability, and ease of operation. An electric motor also will deliver full power throughout its life and can be operated from no load to full load without damage.

Some of the disadvantages of electric power are the limited size motors which can be used when only single-phase current is available, power interruptions, and the necessity of constructing an electric supply line to all pumping locations. In some areas, phase converters are used to partially overcome the disadvantage of single-phase current.

The best type of electric motor for irrigation pumping is the 60-cycle, 220-440-volt, 3-phase, squirrel-cage induction motor. The common speeds are 860, 1,160, and 1,760 r. p. m., with the 1,760 speed being most commonly used. Single-phase motors are usually limited to loads up to 7-1/2 horsepower and, therefore, can be used only on very small pumping jobs. Standard motor sizes are 5, 7-1/2, 10, 15, 20, 25, 30, 40, 50, 60, 75, 100, 125, 150, 175, 200, 225, 250 and 300 horsepower.

An electric motor operates at constant speed. The speed of the pump must be changed either by the use of a belt drive and changing pulley diameters, or by a gear drive with a selection of gear ratios for changing speeds. When the pump and motor are directly connected, a pump must be selected that will operate acceptably at the motor speed. When it is necessary to lower the rate of pumping below that of the design rate, the speed of the pump must be reduced or the head increased by using a valve in the discharge line. On direct-connected units, valves must be used for this purpose. Direct connection between electric motor and pump should be used whenever possible because this type of connection eliminates drive loss and the added expense of the pump head.

Vertical, hollow-shaft motors are available for deep-well turbine pumps. These motors are equipped with a top cap to facilitate propeller adjustments. Two types of couplings are available for turbine pumps depending upon the method of lubrication. A nonreverse coupling is recommended when the pump has water-lubricated line shaft bearings which might possibly be damaged if the shaft were turning when there was no water surrounding the bearings. This condition occurs when the motor is stopped and the water in the well column and discharge line drains back through the pump propellers causing the pump to rotate in the reverse direction. The selfrelease coupling is used when backspin upon shutdown is not objectionable and is normally used on pumps having oil-lubricated line shaft bearings.

The brake horsepower of electric motors is rated at 100-percent continuous operation; that is, the calculated brake horsepower for a given job is the size of motor needed. Electric motors have a built-in service factor of 10 to 15 percent based upon air temperature at 70° F., standard voltage, and a free flow of air around the motor. The service factor allows the motor to operate without harm under

varying conditions of voltage and temperature. Therefore, the added horsepower provided by the service factor should not be used to arrive at a motor rating. Some of the reasons are:

1. Often on rural lines the voltages of the three phases will not always be the same. A relatively small unbalance in phase voltage will cause considerable increase in motor temperature rise. A 3-1/2-percent unbalance will cause about 25-percent increase in temperature rise.

2. Many times, particularly on rural lines, the voltage will drop below the standard. A 10-percent reduction in voltage increases the temperature rise 16 percent.

3. In many cases the methods used to determine the actual motor loads of the driven equipment are not too accurate.

4. Even with good ventilation, motor windings and cooling ducts may become covered with dust, dirt, and grease which cut down the motor's effectiveness in dissipating its heat.

5. Irrigation pumping is often required when temperatures are above 72° F.

Some means must be provided for starting electric motors. Motors require two to three times more current to start than when running. Across-the-line starting or full voltage starter means the switch is closed in one operation and one line surge is created. Reduced-voltage starting is a means of allowing the motor to start under increments of power and divides the line surge into several surges. The power supplier will advise the purchaser on the type of starter required as conditions and policies vary between locations and suppliers.

Controls should be provided to protect the motor from overload and variations occurring in the power source. Each line of three-phase power should have an automatic motor protection built into the motor control. Protective devices must be sized to the motor and load and shielded from high temperatures or sun. Sprinkler systems powered by electric motors should be equipped with a main-line flow control valve. This permits controlling line pressures and prevents overloading of motor during filling of sprinkler-distribution systems. Other types of controls are available for electric motors. Time clocks may be used to turn the pump on and off. Controls, such as time delay fuses, are available to turn the pump on after a power failure. Alarms, light indicators, and other devices are available to warn the operator if the flow of water ceases. Fuses or breakers should be used to protect the wiring and the controls.

The pump and motor should be protected from the weather. This can be accomplished by housing them in a small shed with doors and windows that can be opened to provide good cross-ventilation. The openings in the shed should be so arranged that the hot sun will not shine

directly on the controls or motor. New style vertical motors may be used without housing. The wiring and controls, however, must be weatherproofed or be in a weatherproof enclosure. The motor itself should be protected from rodents. This can be done by installing screen over air openings in the motor. The screen should have a mesh small enough to keep out mice, but not restrict the airflow. With correct protection and care, the electric motor requires little or no maintenance other than the necessary oiling or greasing required by the manufacturer.

Stationary Internal Combustion Engines.
The two general types of internal combustion engines are the spark ignition, or all engines in which combustion takes place when the fuel-air mixture is ignited by an electric spark, and the compression ignition engine better known as a Diesel. The spark-ignition engine may be either liquid-cooled or air-cooled. The air-cooled engine is becoming quite popular for direct-connected centrifugal irrigation pumps in sizes of 25 or lower continuous horsepower. The liquid-cooled engine is manufactured in all sizes. It has the advantage of automatically varying the amount of cooling to cover all possible combinations of loads and speed without over or undercooling the engine. The Diesel engine is much more costly than the spark-ignited type. However, fuel costs are much lower. The Diesel engine is seldom used when the hours of operation per season are under 800.

Manufacturers have developed performance curves for each of their engines. These curves show horsepower rating at various speeds and are used as a basis for engine selection. When the engine manufacturer conducts tests to determine the horsepower rating of an engine, a procedure standardized by the S. A. E. is used so that the horsepower curve of the various sizes and makes of engines may be compared. The test is run under laboratory conditions with a stripped engine, and the power delivered at the flywheel is determined by means of a pony brake or dynamometer. In stripping the engine for the test, accessories and equipment, such as cooling fans, generators, air cleaners and mufflers, are removed. The engine is then hooked up to the dynamometer and run under ideal conditions with the dynamometer recording the horsepower output at various operating speeds. The horsepower, as determined by the dynamometer for various operating speeds, is then plotted in the form of a curve which the manufacturer may label either "brake horsepower" or "dynamometer horsepower" (fig. 8-29).

Since the horsepower output as determined by the manufacturer's test is for laboratory conditions with a stripped engine, this curve does not represent the horsepower output of that engine with power-consuming accessories such as fans, generators, water pumps, etc. These accessories may consume as much as 10 percent of the horsepower output of the engine. The dynamometer horsepower curve must be corrected to reflect the power loss caused by the use of accessories.

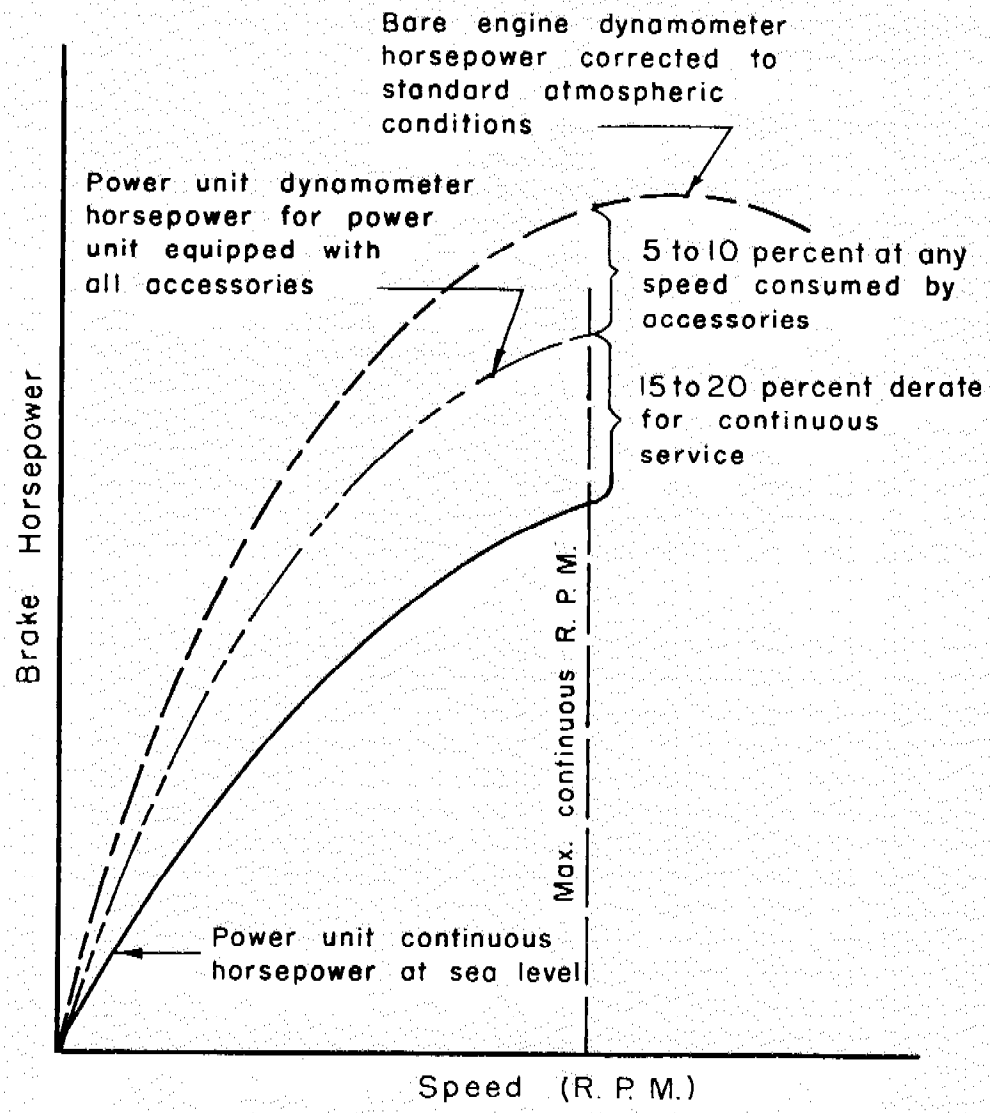

Figure 8-29.—Horsepower output of an internal combustion engine.

Because of the characteristics of the internal combustion engine, it is necessary to further correct the horsepower curve to compensate for continuous loading which is required in irrigation pumping. The effect of continuous loading will decrease the brake horsepower another 15 to 20 percent. In other words, the continuous brake horsepower output with all accessories will be 70 to 80 percent of the dynamometer horsepower as determined by laboratory test. Because altitude and air temperature affect horsepower output and laboratory tests are based on sea level and 60° temperature, it will generally be necessary to make corrections for most irrigation pumping installations. General rules for correcting for elevation and temperature are:

1. Reduce continuous load rating 3 percent for every 1,000 feet above sea level.

2. Reduce continuous load rating 1 percent for every 10° F. above 60° F.

Some manufacturers publish both the dynamometer curve and the continuous brake horsepower curve in their literature. However, when there is only one curve shown, that curve will generally be the horsepower determined by a dynamometer under laboratory conditions.

The University of Nebraska Tractor Testing Department bulletins are another source of reliable information on power output and fuel consumption for a number of gasoline and Diesel engines.

The best operating load for an internal combustion engine is at or near the continuous brake horsepower curve. Running an engine under lighter loads usually results in poor fuel economy for the water delivered, since too much horsepower is used in overcoming engine friction and throttling losses. Running at wide-open throttle invites engine trouble as well as excessive fuel consumption. The main object in irrigation pumping is to pump as much water as possible for the fuel used, and operating the engine near its highest possible load on an economy fuel mixture is the best way to accomplish this.

Irrigation pumping plants operate long periods without supervision. Therefore, safety controls should always be installed to protect the engine and pump. The power unit should have oil pressure and water temperature ignition cutoff switches which automatically shut the engine off if the oil pressure drops or the coolant temperature becomes excessive. A pump water pressure switch should also be used to protect against loss of prime or a drop in the discharge pressure head. Many manufacturers use velocity or mechanical governors to prevent overspeeding the units since the engine usually has more horsepower than the pump requires at greatest speed. Simple and inexpensive overspeed cutout switches have become available, and they replace some governors. The overspeed cutout does not absorb

any measurable power, thus offering a further advantage over governors.

Liquid-cooled engines can be cooled by either a radiator or a heat exchanger. Usually the radiator is more expensive than the heat exchanger, and it also penalizes the engine output because a fan is required. Replacing the radiator with a heat exchanger will give up to 8 percent more usable horsepower. Figure 8-14 shows an example of a heat exchanger and how it is attached to the pump discharge pipe and engine. The capacity of the heat exchanger must be sized to the engine for satisfactory results. There should never be too much cooling capacity for the engine, just as there should never be too little cooling capacity. If the engine has no thermostat, overcooling will result in excessive sludge formation and subsequent wear. If there is a thermostat, the waterflow through the block will be restricted and hot spots may develop. The manufacturer's recommendation on engine temperature should be followed religiously to prevent trouble from over or underheating.

Gasoline and distillate are the most commonly used fuels for spark-ignition engines. Liquid petroleum gas (LPG) and natural gas can also be used. They are easily burned and have almost no tendency to dilute the engine oil with the result that engine maintenance is reduced.

About the only disadvantages to LPG fuel are the initial cost of installation, the frequent need for facing exhaust valves and seats, and the possibility of rare batches of cheap fuel that have too high sulphur content. A storage tank is necessary for LPG, and this is somewhat expensive as it must withstand high pressures and have various safety features. However, buying in bulk further reduces fuel costs greatly. Natural gas is similar to LPG in combustion characteristics except it does not have as high an energy content. As a result, a given engine will have a lower power output when this fuel is substituted for LPG. Natural gas does not require storage facilities. However, it must be piped to the pump location. In locations where it is readily available, it is less expensive than LPG.

Tractor Power.

The farm tractor is probably the least desirable type of power for irrigation pumping. Often the tractor is needed for both pumping and farm operations at the same time. In this case, one or the other has to suffer. It is often used on small systems where irrigation is not needed continuously during the growing season. If a farm tractor is available during the irrigation season, it must be one that is in good mechanical condition and large enough to operate the pump at the required capacity without running at full throttle. The irrigation pump is a constant load machine and differs from the normal farm tractor work where the load is applied intermittently. The farm tractor's normal day-in and day-out workload is decidedly variable, and usually averages far less than the rated load. An engine large enough for a

tractor may not have sufficient power for pumping as horsepower rating of the tractor is based on intermittent operation.

The power from a farm tractor may be transmitted to the pump through either a belt drive or a power takeoff. Tractor manufacturers usually recommend 85 percent of the maximum belt horsepower output and 75 percent of the maximum drawbar horsepower for continuous operation. It must also be remembered that there are additional losses in the drive which vary with the type of drive. Losses in the belt drive were discussed in Belt Drive.

The power takeoff is the type of drive most commonly used with farm tractor power for irrigation pumping. As there is some loss through the power-takeoff shaft with speed increases, most authorities feel that it is desirable to limit the power takeoff power delivered to the irrigation pump to 75 percent of the maximum belt horsepower output. This maximum of 75 percent would apply only where the tractor engine is in good mechanical condition. A lower percentage should be used for older tractors, possibly dropping to 50 percent or lower for tractor motors in only fair mechanical condition.

Power Requirements

General.
To determine the actual horsepower of the power unit used in driving a pump, it is necessary to know the efficiency of the pump, the type of drive, type of power unit, the head under which the pump operates, and all losses in the piping system. The manufacturer will make guarantees on efficiencies that can be obtained for the pumps he proposes to furnish. These efficiencies can be checked in the field under actual working conditions by running a series of tests.

The efficiency of a horizontal centrifugal pump and a vertical centrifugal pump mounted in a dry well includes only the losses in the pump proper. The efficiency of a vertical submerged centrifugal pump includes the losses in the pump plus those incurred from the suction to the end of the pump discharge. The efficiency of a deep-well turbine pump includes all losses from the intake at the end of the bowls to the discharge outlet. If the power unit and pump are not directly connected, there is a "drive" loss that must be considered. These losses are well-enough established to enable accurate assumptions to be made for the various types of drives that are in common use. (Refer to Drives).

The useful work done by a pump or the water horsepower (w.hp.) required is expressed by the formula:

$$\text{w.hp.} = \frac{\text{g. p. m. x total dynamic head (t. d. h.)}}{3{,}960}$$

(The water horsepower represents the power that would be required to operate the pump if the pump and drive were 100-percent efficient.)

The brake horsepower (b.hp.) required to operate a pump is determined by the formula:

$$\text{b.hp.} = \frac{\text{water horsepower (w.hp.)}}{\text{pump efficiency x drive efficiency}}$$

$$\text{pump efficiency} = \frac{\text{output}}{\text{input}} = \frac{\text{w.hp.}}{\text{b.hp.}}$$

overall efficiency = pump efficiency x drive efficiency

Power Requirements for Electric Motors.
Electric motors are rated at 100-percent continuous operation and, therefore, the required brake horsepower to operate the pump plus losses in the drive is the size of electric motor needed.

$$\text{Required b.hp. of motor} = \frac{\text{g.p.m. x total dynamic head (t.d.h.)}}{\text{3,960 x pump eff. x drive eff.}}$$

The efficiency of an electric motor must be considered in determining power consumption. The following formulas apply:

$$\text{Kw. input to motor} = \frac{\text{b.hp. x 0.746}}{\text{motor efficiency}}$$

$$= \frac{\text{g.p.m. x t.d.h. x 0.746}}{\text{3,960 x pump eff. x drive eff. x motor eff.}}$$

$$\text{Kw. - hr. per 1,000 gals. pumped} = \frac{\text{t.d.h. x 0.00314}}{\text{pump eff. x drive eff. x motor eff.}}$$

$$\text{Kw.-hr./acre-foot} = \frac{\text{1.024 x t.d.h.}}{\text{pump eff. x drive eff. x motor eff.}}$$

Table 8-2 lists approximate efficiencies of electric motors operating at full load:

Table 8-2.--Efficiencies of electric motors operating at full speed

Horse-power	Efficiency 860 r.p.m.	Efficiency 1160 r.p.m.	Efficiency 1760 r.p.m.	Horse-power	Efficiency 860 r.p.m.	Efficiency 1160 r.p.m.	Efficiency 1760 r.p.m.
5	81	77.5	84	40	88	86.5	89.5
7 1/2	82.5	83	84	50	89	89	87.5
10	86.5	83.5	85	60	89	89.5	90
15	86	87	85	75	89	90.5	90.5
20	86	87	84	100	89	90.5	91
25	86	86	89	125	90.5	90	91
30	86	86	86	150	91	91.5	91.5
				200	91.5	91	90

Example 8-1: Given a 1,760-r.p.m. electric motor-driven pump installation with V-belt drive required to deliver 650 g.p.m. at 145 t.d.h. Pump efficiency of 75 percent and V-belt drive efficiency of 90 percent.

Find: Motor size and power consumption.

Solution: Required b.hp. of motor $= \dfrac{650 \times 145}{3{,}960 \times 0.75 \times 0.90} = 35.3$

Use a 40-hp. motor. Motor efficiency will be approximately 89.5 percent (from table 8-2).

$$\text{Input} = \frac{35.3 \times 0.746}{0.895} = 29.4 \text{ kw.}$$

$$\text{kwh./1,000 gal.} = \frac{145 \times 0.00314}{0.75 \times 0.90 \times 0.895} = 0.75$$

Power Requirements for Internal Combustion Engines.

Internal combustion engines are rated on the bare engine dynamometer hp. developed at the shaft; therefore, the efficiency of the unit does not enter into computations. The rated hp. of the engine must be in excess of the required hp. to drive the pump to offset the losses due to accessories and provide for continuous operation.

$$\text{Engine brake horsepower required to operate pump (b.hp.)} = \frac{\text{G.p.m. x t.d.h.}}{\text{3,960 x pump eff. x drive eff.}}$$

The following example shows the method of computing the brake horsepower required by an internal combustion engine to operate an irrigation pump; also, the necessary corrections for altitude, temperature, and continuous operation:

Example 8-2.

Given: Given a centrifugal pump powered by a direct drive gasoline engine to deliver 480 g. p. m. at a t. d. h. of 180 feet. Pump efficiency - 73 percent. Drive efficiency = 100 percent for direct drive. Heat exchanger used instead of engine radiator. Pumping site is 2,000 feet above sea level and the daytime temperature is 90° F.

Procedure: $$\text{B.hp.} = \frac{480 \times 180}{3960 \times 0.73 \times 1.00} = 29.9$$

Corrections for engine losses as follows:

	Loss -percent
1. Continuous load operation	20
2. Accessories -- generator, air cleaner, etc. (heat exchanger for cooling)	5
3. Elevation -- 2000 feet @ 3 percent per 1000 feet above sea level	6
4. Temperature (90° - 60° = 30° x 1 percent per 10° increase)	3
Total deduction	34

$$\text{Size of engine required} = \frac{29.9 \text{ b.hp.}}{1.0 - 0.34} = 45.3 \text{ b.hp.}$$

Cost of Pumping

General.
The engineer may be called upon to compare costs of different types of pumping installations, particularly the use of different kinds of power units. It may also be necessary to determine pumping costs in figuring the economics of irrigation. The purpose here will be to point out all factors that should be taken into consideration in computing the cost of pumping the water at the outlet of the pump.

It is impossible to give actual costs of pumping-plant installations that will be applicable to all field conditions. Close estimates of equipment and construction costs may be prepared by consultation with manufacturers and review of past installations so that the actual pumping costs will be within the limits anticipated.

Cost of pumping includes all fixed and operating costs. Fixed costs include all costs for which an initial outlay is made or a capital investment is extended, including taxes and insurance. Annual operating charges include all recurring costs.

Fixed Costs.

1. Interest. Calculated at the prevailing interest rate on the average value of the installation.

   Annual interest cost =

   $$\frac{\text{Value of installation}}{2} \times \text{interest rate}$$

2. Taxes and insurance. This item varies from one area to another. Use actual rates if available. For preliminary estimates, such costs are usually assumed to total about 1 percent of the initial cost of the installation.

3. Depreciation. Depreciation should be based on either time of operation or age. In areas where pumps are operated almost continuously, the year around hours of operation should be used. Age is a satisfactory method for determining depreciation where pumps are used less than 2,000 hours per season. Table 8-3 of depreciation figures, based on work at the University of Nebraska, can be used in figuring depreciation:

Table 8-3.---Pumping plant depreciation

Item	Estimated useful life
Well and casing	20 years
Plant housing	20 years
Pump turbine:	
Bowl (about 50 percent of cost of pump unit)	16,000 hours or 8 years
Column, etc.	32,000 hours or 16 years
Pump, centrifugal	32,000 hours or 16 years
Power transmission:	
Gear head	30,000 hours or 15 years
V-Belt	6,000 hours or 3 years
Flat-Belt, rubber and fabric	10,000 hours or 5 years
Flat-Belt, leather	20,000 hours or 10 years
Electric motor	50,000 hours or 25 years
Diesel engine	28,000 hours or 14 years
Gasoline or distillate engine:.	
Air-cooled	8,000 hours or 4 years
Water-cooled	18,000 hours or 9 years
Propane engine	28,000 hours or 14 years

Operating Costs.

1. Fuel Consumption.

a. Electric. Power consumption for electric motors can be estimated with a large degree of accuracy. The Blaney-Criddle Formula 3/ can be used as a basis for determining seasonal use. Also, studies of drought-occurrence frequencies will be helpful in determining the amount of pumping. Two methods can be used to estimate power cost:

(1) Based on number of gallons of water pumped.

Kw.-hr. per 1,000 gallons pumped =

$$\frac{\text{t.d.h.} \times 0.00314}{\text{pump eff.} \times \text{drive eff.} \times \text{motor eff.}}$$

Annual cost =

$$\frac{\text{Total No. gals. for year} \times \text{kw.-hr./1,000 gals.} \times \text{cost per kw.-hr.}}{1,000}$$

Cost per acre-inch = kw.-hr./1,000 gals. x 27.154 x cost per kw.-hr.

3/ Blaney, H. F., and W. D. Criddle. Determining Water Requirements in Irrigated Areas from Climatological and Irrigation Data. U. S. Department of Agriculture, Soil Conservation Service, SCS-TP-96, 1950.

(2) Based on cost per hour for each hour that pumping system operates. For preliminary estimates, the cost per hour can be figured from table 8-4. The horsepower in the table is the required b. h. p. to operate the pump and drive and is not necessarily the size of the motor provided for the job. The figures in the table are based on a motor efficiency of 100 percent. Correct these figures according to the efficiency of the motor selected. Table 8-2 lists approximate efficiencies of electric motors based on horsepower and r. p. m.

Example 8-3:

Given: Pump installation in example 8-2. Required b.hp. = 35.3, 40 h.p. electric motor approximately 89.5 percent efficient and operating 1,200 hours per year. Power cost at $0.03 per kw.-hr.

Find: Fuel cost per hour for each hour of operation and total yearly cost.

Solution: From table 8-4, find cost per hour for 35 b.h.p. at $0.03 per kw. = $0.78 for 100 percent efficient motor. Then cost per hour for 89.5 percent efficiency = $\frac{0.78}{.895}$ = $0.87.

Total yearly cost = 1,200 x 0.87 = $1,044.

b. Internal combustion. An estimate of the rate of fuel consumption for a given engine can most accurately be made if the manufacturer's fuel-consumption curve for that engine is available. When curves are not available, the following tabulation which is based on average mechanical and operating conditions can be used for preliminary estimating purposes:

Type of engine	Fuel consumed Gallons/h.p.-hr.
Gasoline (air-cooled)	1/8
Gasoline (water-cooled)	1/10
Propane	1/7
High-speed Diesel	1/12

Fuel consumption of the propane engine probably has the greatest variance because the compression ratio has a marked effect on rate of fuel consumption. Engines with higher compression ratios consume less fuel. Any engine in poor repair may exceed the ratio given. The loads imposed on the engine is an important factor in fuel consumption. Fuel cost will go up if the throttle setting of the engine is increased beyond the manufacturer's recommendation.

(Cost per hour of operation) = b.hp. x (Fuel consumed in gallons per h.p. hour) x cost of fuel per gal.

Total annual fuel cost = Cost per hour x Total hours operated.

Fuel consumption of natural gas engines vary with the B.T.U. content of the gas. For estimating purposes, it can be assumed that 10 cubic feet of gas are required for each horsepower-hour of operation.

2. Lubricating Oil and Greases.

   a. Negligible for electric-driven plants.

   b. Internal combustion engines.

Lubricating oil		Grease per hr. of operation
Gasoline engine	1 gal. per 1,000 hp.-hrs.	$0.01
Diesel	1 gal. per 1,000 hp.-hrs.	.01
LPG and natural gas	0.3 gal. per 1,000 hp.-hrs.	.01

3. Engine maintenance and repairs. Repair costs are difficult to estimate since they tend to increase with the age of the equipment. The amount of repairs are largely affected by the total hours of operation. When accurate costs are not available, the following can be used to estimate repair and maintenance costs:

Electric motors	$3.00/year w.hp.
Gasoline and distillate	$ .00175 per w.hp-hrs.
Diesel	$ .0021 per w.hp.-hrs.

4. Pump Maintenance and Repairs.

   Turbine: Yearly cost = $\frac{\text{One-half total cost}}{\text{Estimated life in years}}$

   Centrifugal: Yearly cost = $\frac{\text{Total cost}}{\text{Estimated life in years}}$

5. Shelter Maintenance - $2.00 per year.

6. Attendance + Percent of plant operation time x Prevailing wage rate.

   The percent of plant-operation time varies according to the type of installation as follows:

Diesels with large storage tank, electric or natural gas	- 3 percent
Gasoline or distillate plants permanently mounted	- 5 percent
Movable installations	- 10 percent

Table 8-4.--Electric motor power costs 1/

Required b.hp.	Electric motor cost per hour based on 100 percent A.C. power factor and 100 percent motor efficiency when the current rate per kilowatt hour is									
	3/4	1	1½	2	2½	3	3½	4	4½	5
5	0.03	0.04	0.06	0.08	0.09	0.11	0.13	0.15	0.17	0.19
10	.06	.07	.11	.15	.19	.22	.26	.30	.34	.37
15	.08	.11	.17	.22	.28	.34	.39	.45	.50	.56
20	.11	.15	.22	.30	.37	.45	.52	.60	.67	.75
25	.14	.19	.28	.37	.47	.56	.65	.75	.39	.93
30	.17	.22	.34	.45	.56	.67	.78	.90	1.01	1.12
35	.20	.26	.39	.52	.65	.78	.91	1.04	1.18	1.31
40	.22	.30	.45	.60	.75	.90	1.04	1.19	1.34	1.49
45	.25	.34	.50	.67	.84	1.01	1.18	1.34	1.51	1.68
50	.28	.37	.56	.75	.93	1.12	1.31	1.49	1.68	1.87
60	.34	.45	.67	.90	1.12	1.34	1.57	1.79	2.01	2.24
70	.39	.52	.78	1.04	1.31	1.57	1.83	2.09	2.35	2.61
80	.45	.60	.90	1.19	1.49	1.79	2.09	2.39	2.69	2.98
90	.50	.67	1.01	1.34	1.68	2.01	2.35	2.69	3.02	3.36
100	.56	.75	1.12	1.49	1.87	2.24	2.62	2.99	3.36	3.74
120	.67	.90	1.34	1.79	2.24	2.69	3.13	3.58	4.03	4.48
140	.78	1.04	1.57	2.09	2.61	3.13	3.66	4.18	4.70	5.22
160	.90	1.19	1.79	2.39	2.98	3.58	4.18	4.77	5.37	5.97
175	.98	1.31	1.96	2.61	3.26	3.92	4.57	5.22	5.88	5.28
180	1.01	1.34	2.01	2.69	3.36	4.03	4.70	5.37	6.04	6.71
200	1.12	1.49	2.24	2.98	3.73	4.48	5.22	5.97	6.71	7.46
225	1.26	1.68	2.52	3.36	4.20	5.04	5.88	6.71	7.55	8.39
250	1.40	1.87	2.80	3.73	4.66	5.60	6.53	7.46	8.39	9.33
275	1.54	2.05	3.08	4.10	5.13	6.16	7.18	8.21	9.23	10.26
300	1.68	2.24	3.36	4.48	5.60	6.71	7.83	8.95	10.07	11.19

1/ Electric motor cost is based on the delivered horsepower, assuming an efficiency of 100 percent for the motor itself, 100 percent electrical power factor, and continuous full-load operation.

Summary.

$$\text{Total yearly costs} = \text{fixed cost} + \text{operating cost}$$

$$\text{Cost per acre-foot} = \frac{\text{total yearly cost}}{\text{acre-foot of water pumped}}$$

$$\text{Cost per acre-foot per foot of lift} = \frac{\text{cost per acre-foot}}{\text{feet of pumping lift}}$$

$$\text{Operating cost per acre-foot} = \frac{\text{operating cost}}{\text{acre-foot of water pumped}}$$

$$\text{Cost per acre} = \frac{\text{total yearly cost}}{\text{acres irrigated}}$$

Annual fixed costs depend entirely upon the amount of initial investment. In attempting to reduce these fixed costs, it is usually not a sound policy to purchase smaller equipment than needed or equipment of low quality. A smaller pumping plant that must pump the required amount of water will naturally have to operate over a longer period of time. The fixed costs by using the smaller plant would be reduced. The operating costs,however, may be increased in greater proportion. A plant of greater initial cost may be sufficiently more economical in fuel and repairs to warrant the higher fixed costs.

Only a cost study will give the information necessary to arrive at the best selection. A combination of fixed and operating costs resulting in the lowest over-all costs will generally be the best selection of the type and size of pumping plant.

Example 8-4:

Given: Six-inch centrifugal pump, flexible coupling drive; 6-cylinder industrial water-cooled gasoline engine; wooden pump house with concrete foundation; 70 acres irrigated with yearly application of 12 feet of water; 60 b.hp. required; operated 400 hours per year; total pumping head of 220 feet; gasoline at $0.25/gallon and oil at $1.00 per gallon; interest rate of 5 percent.

Find: Total yearly cost; total yearly cost per acre-foot; annual operating cost per acre-foot; and total annual cost per acre irrigated.

Solution:

1. Initial Investment.

Pump complete with suction hose and strainer	780.00
6-cylinder industrial gasoline engine	1,270.00
Pump house and foundation,.....	600.00
	$2,650.00

2. Fixed Cost — Dollars

a. Interest $\left(\frac{2650}{2} \times 0.05\right)$ 66.25

b. Taxes and insurance (2,650 x 0.01) 26.50

c. Depreciation

Centrifugal pump--- 16 years $\frac{780}{16}$ 48.75

Gasoline engine--- 9 years $\frac{1270}{9}$ 141.11

Pump house---------- 20 years $\frac{600}{20}$ 30.00

Total fixed cost $312.61

3. Annual Operating Cost

a. Fuel consumption

(Cost per hour of operation) = 60 b.hp. x 0.1 gal./hp. x $0.25/gal.= $1.50

Total annual fuel cost = $1.50 x 400 hours $600.00

b. Lubricating oil and greases

Dollars

Oil - $\frac{400 \text{ hours} \times 60 \text{ b.hp.}}{1{,}000 \text{ hours}}$ x $1.00 per gal. ... 24.00

Grease - 400 hours x $0.01 per hr. 4.00

c. Engine maintenance and repairs

$$\text{w.hp.} = \frac{800 \text{ g. p. m. x } 220 \text{ feet}}{3{,}960 \text{ w.hp.}} = 44.4$$

Cost = 44.4 w.hp. x 400 hours x $0.00175 ..... 31.08

		Dollars
d.	Pump maintenance and repairs	
	Yearly cost = $\frac{780}{16}$	48.75
e.	Shelter maintenance	2.00
f.	Attendance - 400 hours x 0.05 x $1.00 per hour	20.00
	Total annual operating cost	$729.83

4. Summary of Costs:

Total yearly cost = $312.61 + $729.83 = Dollars 1,042.44

Cost per acre-foot = $\frac{1,042.44}{1 \text{ ft.} \times 70 \text{ acres}}$ = 14.89

Cost per acre-foot per foot of lift = $\frac{14.89}{220}$ = $0.068

Operating cost per acre-foot = $\frac{729.83}{70 \text{ acres}}$ = 10.43

Total annual cost per acre = $\frac{1,042.44}{70 \text{ acres}}$ = 14.89

☆ U. S. GOVERNMENT PRINTING OFFICE : 1959 O -498445