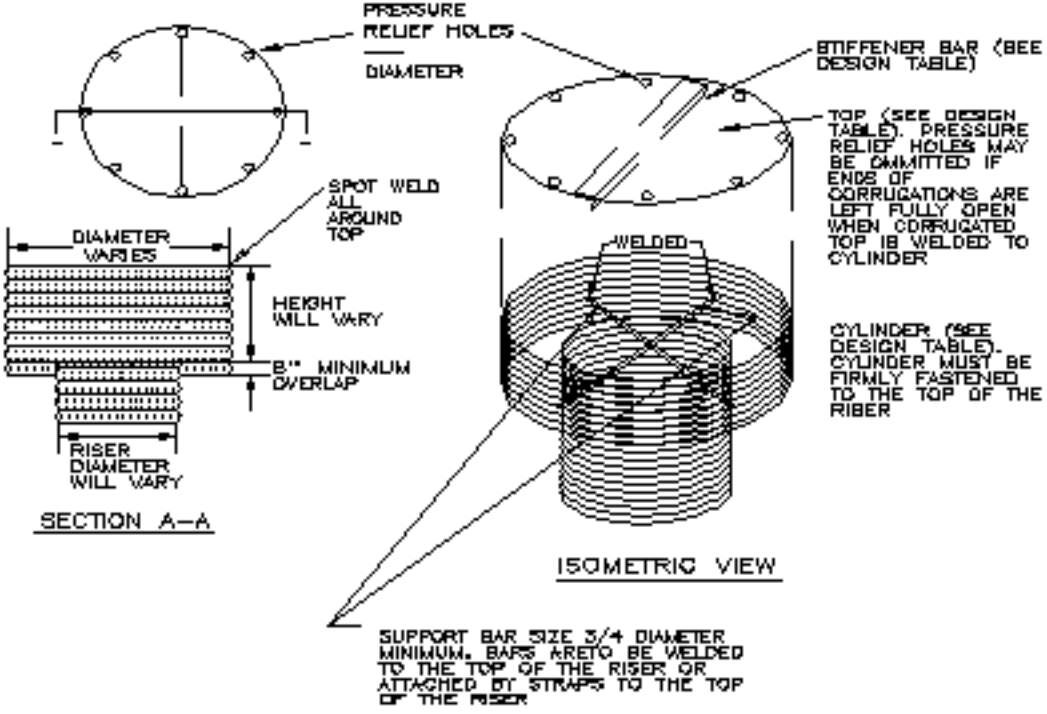DETAIL 16 - CONCENTRIC TRASH RACK AND ANTI-VORTEX DEVICE